Board of Adjustment
Case Report

City of Raleigh
Department of City Planning
One Exchange Plaza
Raleigh, NC 27601
(919) 996-2626
www.raleighnc.gov

Case File: **A-105-16**

Property Address: 1329 Mayfair Road

Property Owner: William and Anna Dickson

Project Contact: Michael Birch

Nature of Case: A request for a variance for complete relief from the active stormwater control measures and requirements set forth in Section 9.2.2. of the Part 10A Unified Development Ordinance to allow for the construction of a detached house and any accessory structures/impervious surfaces on a .32 acre site zoned Residential-4 and located at 1329 Mayfair Road.

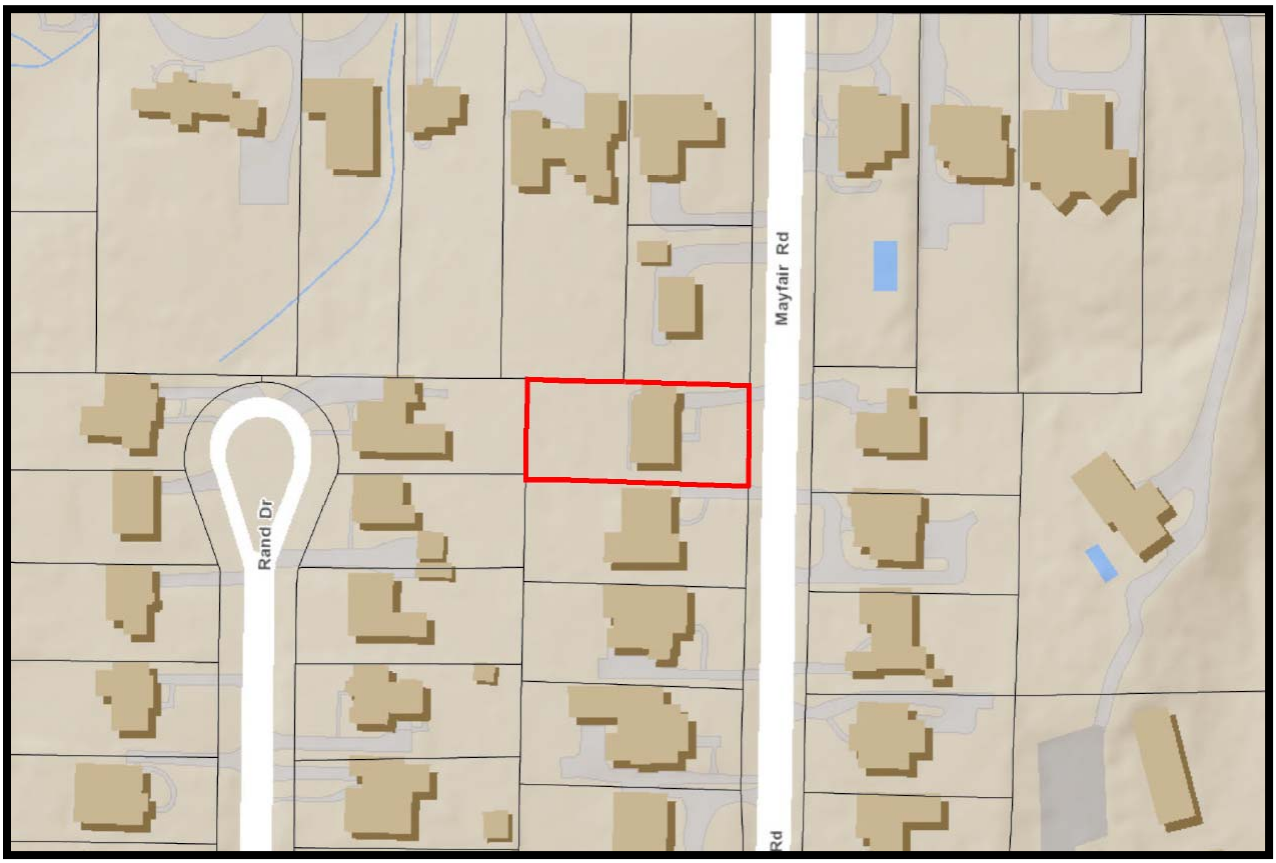

1329 Mayfair Road – Location Map

To BOA: 9-12-16

Staff Coordinator: Eric S. Hodge, AICP

ZONING DISTRICTS: Residential-4

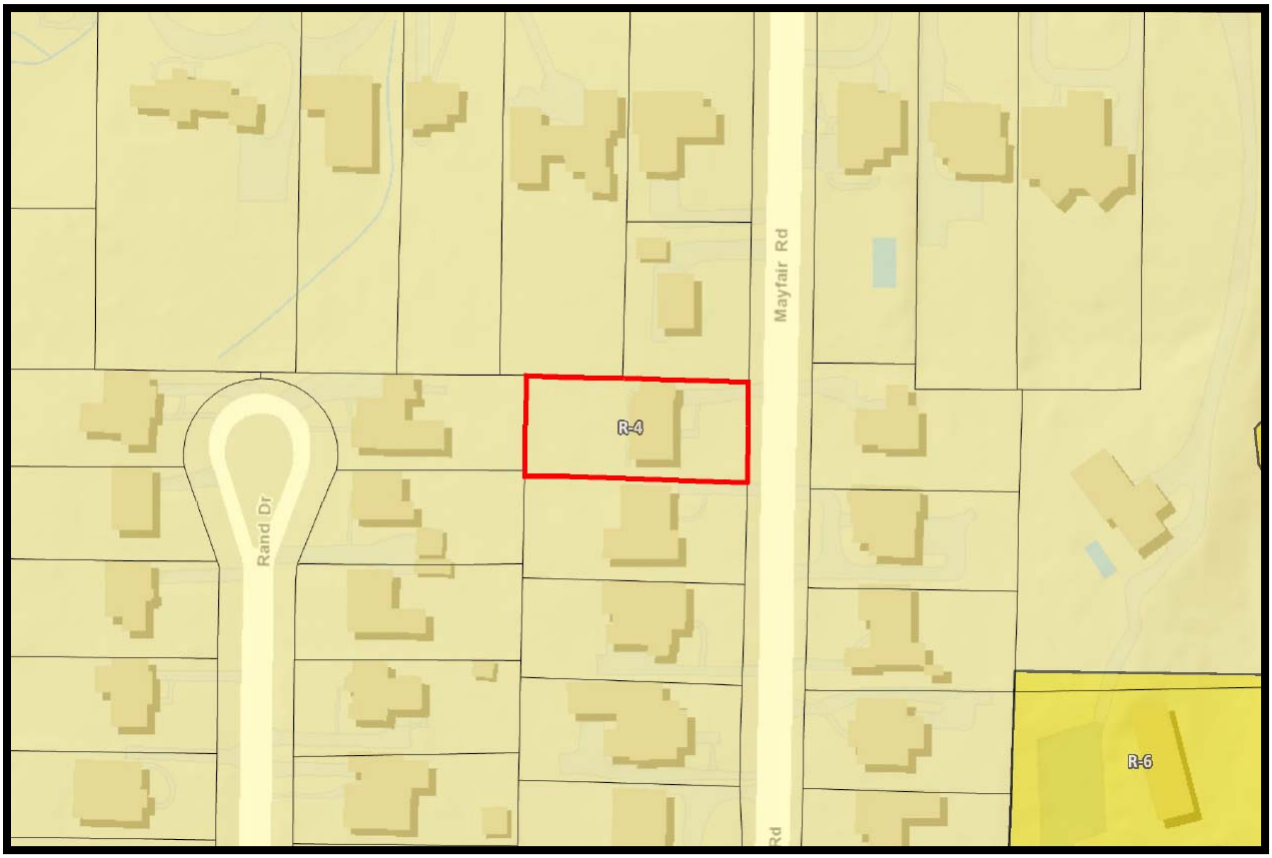

1329 Mayfair Road – Zoning Map

VARIANCE STANDARDS: In accordance with UDO §10.2.10 Variance, before a variance request is granted, the Board of Adjustment shall show all of the following:

1. Unnecessary hardship would result from the strict application of the ordinance. It shall not be necessary to demonstrate that, in the absence of the variance, no reasonable use can be made of the property.

2. The hardship results from conditions that are peculiar to the property, such as location, size or topography. Hardships resulting from personal circumstances, as well as hardships resulting from conditions that are common to the neighborhood or the general public, may not be the basis for granting a variance.

3. **The hardship did not result from actions taken by the applicant or the property owner. The act of purchasing property with knowledge that circumstances exist that may justify the granting of a variance shall not be regarded as a self-created hardship.**

4. **The requested variance is consistent with the spirit, purpose and intent of the ordinance, such that public safety is secured and substantial justice is achieved.**

Setback Standards: The subject property is zoned Residential-4

Yard Type	Minimum Setback
Front Yard	20’
Side Street	15’
Side	10’
Sum of Side Setbacks	20’
Rear	30’

Article 9.2. Stormwater Management

Sec. 9.2.1. General Provisions

A. Applicability

Prior to any land disturbing activity or subdivision of land, stormwater control measures, watercourse buffers or both must be provided in conformity with the requirements of this Article.

B. Manual and Guidelines Incorporated

The Raleigh Stormwater Control and Watercourse Buffer Manual along with the Guidelines for Land Disturbing Activities and amendments, on file in the City Clerk's Office, is adopted by reference as part of this UDO.

Sec. 9.2.2. Active Stormwater Control Measures

A. Exemptions

The following uses are exempt from the active stormwater control requirements of this section:

1. Any detached house used for single-unit living or any attached house used for two-unit living, built as part of a subdivision 1 acre or less in aggregate size;
2. Any plot plan or site plan of ½ acre or less in aggregate size that cfontains less than 12,000 square feet of impervious surface, including impervious surfaces of related on-site or off-site facilities;
3. Any land-disturbing activity that does not require a land-disturbing permit under *Sec. 9.4.6.* provided that, upon application of any impervious surfaces this exemption shall not apply;
4. Substitution of impervious surfaces when all the standards of *Sec. 10.3.4.* are met; and
5. Substitution of impervious surfaces with approved pervious surfaces.

B. Nitrogen Reduction

1. Requirement

a. Any new or expansion of existing development, not in compliance with the stormwater control master plan approved for its drainage basin, may not contribute a nitrogen export load exceeding 3.6 pounds per acre per year.

b. Compliance with stormwater control master plan must include the installation within the development of all stormwater control measures shown on the stormwater control master plan, payment of fees in lieu of installation, when allowed by the City and payment of any applicable drainage fees.

2. Payment In Lieu Option

The nitrogen export load limitations for a development may be off-set through a payment made to the North Carolina Riparian Buffer Restoration Fund or private mitigation bank. The payment shall be based on the latest fee adopted by the State and shall meet the following requirements.

a. In General

i. Installation of City-approved stormwater control measures or payment in lieu option or a combination of both may be used to satisfy the nitrogen load requirement.

ii. For subdivisions with an approved stormwater control facilities plan, all payments shall be made prior to issuance of a land disturbance permit. Where no land disturbance permit is required, fees shall be due prior to recording of the plat.

iii. For all other developments, payments shall be paid to the North Carolina Riparian Buffer Restoration Fund prior to the issuance of applicable development permits.

b. Residential Development

i. For any detached house used for single-unit living or any attached house used for two-unit living, a one-time offset payment may be paid to the North Carolina Riparian Buffer Restoration Fund to reduce the nitrogen export load of up to 6 pounds per acre per year to 3.6 pounds per acre per year.

ii. All residential development that exceeds nitrogen export loads of 6 pounds per acre per year must install City-approved stormwater control measures to reduce the nitrogen export load of their development to 6 pounds per acre per year limitation to become eligible for the payment in lieu option.

c. Mixed Use and Nonresidential Development

i. For mixed use and nonresidential development, a one-time offset payment may be paid to the North Carolina Riparian Buffer Restoration Fund to reduce the nitrogen export load of up to 10 pounds per acre per year to 3.6 pounds per acre per year.

ii. Mixed use and nonresidential development that exceeds nitrogen export loads of 10 pounds per acre per year must install City-approved stormwater control measures to reduce the nitrogen export load of their development to 10 pounds per acre per year limitation to become eligible for the payment in lieu option.

C. Stormwater Control Permits

1. No development, expansion of existing development or the placement of more than 12,000 square feet of any impervious surface, may occur on a site without a stormwater control permit from the Office of Development Services.
2. No stormwater control permit may be approved until a stormwater control plan is first approved by the City in accordance with *Sec. 9.2.2.D.*
3. No stormwater control permit may be issued except in strict conformity with the provisions of this Article, the Raleigh Stormwater Control and Watercourse Buffer Manual.
4. No stormwater control permit may be issued until the boundaries of any watercourse buffer, riparian surface water buffer or transitional protective yard in a -MPOD, -UWPOD, -FWPOD or -SWPOD or CM District and permanently protected undisturbed open space areas which are adjacent to or encompass a work site are clearly and accurately demarcated by a protective fence in the field. Protection measures must be field verified by a Professional Land Surveyor.

D. Stormwater Control Plans

1. General Requirements

a. Stormwater control plans must be prepared by a qualified registered North Carolina professional engineer, surveyor or landscape architect.

b. All parts of a stormwater control plan, including data calculation design and installation of storm control measures and devices shall be in compliance with the Raleigh Stormwater Control and Watercourse Buffer Manual.

c. Stormwater control plans must show how nitrogen reduction and stormwater runoff control requirements are being met and how watercourse buffers are being protected.

d. A surety equal to 125% of the cost of construction of a stormwater device shall be paid to the City prior to permit issuance. If the amount of impervious surfaces for the bonded area exceeds 15% , the City may cash the surety.

2. Maintenance Manual and Budget

a. The stormwater control plan must be accompanied by a stormwater operations maintenance manual and budget.

b. Prior to either grading any portion of the development or submitting construction drawing plans of any applicable stormwater control facility to the City, whichever event first occurs, a stormwater operations maintenance and budget shall be submitted to the Stormwater Utility Division of the Public Works Department.

c. The maintenance manual shall contain a narrative describing each installed measure and device and its design specifications.

d. The maintenance manual shall describe which lots are served by each device.

e. The maintenance manual shall indicate for each installed measure and device what operation and maintenance actions are needed and what specific quantitative criteria will be used to determine when these actions will be taken.

f. The maintenance manual must indicate the steps that will be taken to restore a measure or device to the design specifications if a failure occurs.

g. The maintenance manual must contain a statement about the expected life of each stormwater control facility and a replacement schedule derived by dividing the initial construction cost of each stormwater control facility by the expected life of that stormwater control facility.

h. The budget shall include annual costs such as routine maintenance, repair, periodic sediment removal and replenishment of rip-rap, insurance premiums associated with the stormwater control facilities, taxes levied against the stormwater control facilities, mowing and reseeding, required inspections.

3. As-Built Plans and Certification

Stormwater control plans must be followed by as-built plans certified under seal, that the stormwater measures and devices and their installation are in compliance with the Raleigh Stormwater Control and Watercourse Buffer Manual and the City-approved or modified stormwater control plan. No certificate of compliance or occupancy may be issued by the Office of Development Services without approved as-built plans. At a minimum, the as-built plans must contain the following information:

a. The name and address of the land owner;

b. The recorded book and page number of the lot of each required stormwater control facility and required open space area;

c. A statement that all inspected stormwater control facilities and open space areas are in compliance with the approved stormwater control plan, the applicable maintenance manual required and the Raleigh Stormwater Control and Watercourse Buffer Manual; and

d. The original signature and seal of the engineer, surveyor or landscape architect.

E. Stormwater Runoff Controls

1. Runoff Limitation

a. After May 1, 2001, the peak stormwater runoff leaving any site for the two-year and 10-year storms shall be no greater at every point of discharge for post-development conditions than pre-development conditions. The same methodologies used to calculate stormwater runoff must be used for both pre-development and post-development conditions.

b. For any denuded area on sites between 5 and 15 acres in size the peak stormwater runoff leaving the site at each discharge point for the two-year storm and 10-year storm shall be no greater during construction than for pre-development conditions. For any land disturbing activity on sites, greater than 15 acres in size the peak stormwater runoff leaving the site at each discharge point for the two-year storm, 10-year storm and 25-year storm shall be no greater during construction than for pre-development conditions. However, this regulation shall not be applicable when the development site conforms to all of the following:

i. The disturbed acreage is less than 5 acres; and

ii. The two-year peak discharge for the disturbed condition, for all points of discharge, is less than 10% of the peak discharge from the contributing watershed as measured at the nearest receiving watercourse.

2. Exemptions

The stormwater runoff control requirements do not apply to sites with any of the following conditions.

a. The development complies with the stormwater control master plan approved for its drainage basin.

b. The increase in peak stormwater runoff between pre-development and post-development conditions for the two-year and 10-year and 25-year storms is 10% or less at each point of discharge.

c. The maximum impervious surface coverage of the lot, including any existing impervious surfaces, is no more than 15% and the remaining pervious portions of the lot are utilized to convey and control the stormwater runoff of the lot to the maximum extent practical. In the event that the site is subsequently subdivided, reduced by recombination or the impervious surface is equal to or exceeds 15% the site may no longer be exempt.

d. Compliance with *Sec. 9.2.2.E.1.* above, would result in greater adverse downstream impact, such as local flooding, as determined by City-approved engineering studies.

e. Compliance with the 10-year storm and 25-year storm runoff limitations in *Sec. 9.2.2.E.1.* above results in no benefit to current and future downstream development, as determined by City-approved engineering studies.

3. Additional Runoff Controls

The City may require the installation of stormwater runoff control measures for projects without any stormwater measures present. The City reserves the right to require additional stormwater runoff control measures for projects which are compliant with *Sec. 9.2.2.E.1.* above, if stormwater runoff from the site could cause adverse effects on other properties including, without limitation, public streets, greenways and utility easements.

a. As part of an application for rezoning, subdivision or site plan for sites at or upstream of documented structural flooding cases, the applicant shall submit a stormwater impact analysis to the Public Works Director.

b. This requirement does not extend to sites initially zoned and added to the territorial coverage of as a result of annexation, extraterritorial jurisdictional expansion or otherwise or application of any overlay district.

c. The stormwater impact analysis shall look at the flood level differences between pre-development and post-development conditions for the 25-, 50- and 100-year storm events. If the analysis shows an increase greater than 0.04 feet between pre-development and post-development flood levels at the site of structural flooding then mitigation to pre-development flood conditions will be required to prevent further damage to the affected property.

d. In the case where the area of the subject property is less than 5% of the drainage area, measured to the location of the documented structural flooding, then this analysis shall not be required.

e. In the event flood levels are increased, then the affected property owners will be notified in writing of any increase by the applicant.

F. Preservation of Open Space Areas

1. Open Space Areas Preserved

a. Areas designated on approved stormwater control plans as open space to be used for complying with this Article shall be preserved and protected.

b. The only activities allowed in designated open space areas are those activities allowed by the approved stormwater control plan or allowed in riparian surface water buffers under Title 15A North Carolina Administrative Code Article 2B, section .0233, as amended from time to time. Determinations required by the North Carolina Administrative Code shall be made by the City.

c. No work in open space areas shall proceed without a written protected watercourse buffer permit from the Inspections Director.

d. Permanently protected undisturbed open space areas identified on stormwater control plans shall be recorded on plats recorded with the County Register of Deeds and clearly delineated with a fence.

2. Exchange of Open Space Areas

Open space areas may not be subdivided or conveyed by the owner. However, nothing in this section shall prevent the mortgaging and hypothecating of open space areas; provided the mortgage applies to all portions of the tract and not just the open space areas, the mortgagee is informed that the open space areas are used for complying with the requirements of the Article and the rights of the mortgagee are subordinated to the rights of any property owner association and its members. Furthermore, nothing shall prevent the exchanging of open space areas for other properties when all of the following are met:

a. If the open space area is owned by a homeowners' association, written notice of the exchange is given to each member of the association except in cases where the exchange is done to eliminate an encroachment;

b. After the notice is given, if required, the owner of the open space area approves the exchange;

c. The exchanged properties and other considerations are of like value and utility;

d. The acreage and configuration of the remaining open space area including real property to be received in such exchange equal or exceeds the requirements of the City Code; and

e. The exchange is approved by the Public Works Director.

G. Maintenance of Stormwater Control Measures and Devices

1. General Requirements

a. The land owner or person in possession or control of the land shall maintain all on-site stormwater control facilities and all open space areas required by the approved stormwater control plan unless those facilities and open space areas are accepted for maintenance by a governmental agency.

b. The land owner entitled to the exclusive use of an off-site drainage easement for one or more stormwater control facilities not accepted for maintenance by a governmental agency shall maintain said stormwater control facilities.

2. Maintenance Covenant

For off-site stormwater control facilities and for all other stormwater control facilities which serve more than 1 lot that are not accepted for maintenance by a governmental agency, the developer shall execute and record with the local county register of deeds office a maintenance covenant, using a City form, with the following contents.

a. Location of Stormwater Control Facilities and Drainage Easements

i. A description of portions of property where stormwater control facilities are located as well as a description of the location of all private drainage easements conveying stormwater to and from the development to the facilities.

ii. A process for relocating private drainage easements, with any relocation to require the prior written consent of the City.

b. Easement Rights of Lot Owners

A statement that owners of properties that will be served by the stormwater control facilities are:

a) Granted perpetual, irrevocable and non-exclusive easement rights and privileges to use, construct, install, inspect, replace, reconstruct, repair and maintain those stormwater control facilities including the right to access those stormwater control facilities, private drainage easements and other portions of the development as reasonably necessary to perform the granted easement rights; and

b) The granting of perpetual, irrevocable and non-exclusive easement rights and privileges to transport, store and discharge stormwater to and from the stormwater control facilities.

c. City Easement/Right of Entry/No City Responsibility

i. A grant from the developer, the association (if any) and the lot owners to the City of a permanent non-exclusive irrevocable easement over the lots, stormwater control facilities and private drainage easements for inspection, maintenance, repair, construction, installation, re-construction, replacement and other work on, in and over the stormwater control facilities.

ii. A grant from the developer, the association (if any) and the lot owners to the City of a permanent, irrevocable, nonexclusive right of ingress, egress and regress over and across all public or private easements on the property and through all access easements benefitting the developer, association (if any) and the lot owners through any adjacent properties, including but not limited to private roads, for inspection, maintenance, repair construction, installation, reconstruction, replacement and other work on the stormwater control facilities. The rights granted to the City shall include employees, agents and contractors of the City of Raleigh. The grant of these rights does not obligate the City to exercise them or to take any other action.

d. Stormwater Operations and Maintenance Manual and Budget

A stormwater operations and maintenance manual and budget conforming to *Sec. 9.2.2.D.2.* shall be attached to and incorporated into the maintenance covenant as an exhibit.

e. Insurance

The party responsible for maintenance of the stormwater control facilities shall, as part of the routine costs and expenses of maintaining any stormwater control facility, procure and maintain in full force and effect liability insurance in an amount not less than $1,000,000 of coverage.

f. Standards of Maintenance for Stormwater Control Facilities

A statement that stormwater control facilities shall be maintained in accordance with the attached stormwater operations and maintenance manual and budget and at all times, the stormwater control facilities shall comply with all applicable laws, ordinances, regulations, rules and directives of governmental authorities and that the stormwater control facilities shall perform as designed.

g. Responsibility for Stormwater Control Maintenance

i. A statement that the property owners' association or a designated commercial lot owner, shall be responsible for all stormwater control facilities in accordance with the attached stormwater operations and maintenance manual and budget.

ii. A statement that the failure to maintain any stormwater control facility in accordance with the terms of the maintenance covenant and this UDO is a violation of the City Code, potentially subjecting each lot owner subject to the maintenance covenant to significant daily civil penalties and other enforcement actions.

h. Stormwater Control Facilities Maintained by an Association

i. If a property owners' association is delegated maintenance responsibilities for the stormwater control facilities, then membership into the association shall be mandatory for the owner of each parcel served by the facility, such membership shall be appurtenant to the parcel and shall run with ownership of the parcel.

ii. The property owners' association shall have the power to levy assessments for the operation and maintenance of the stormwater control facilities and all unpaid assessments levied by the association shall become a lien on the individual parcel.

iii. The calculation of the assessment charge shall be set forth in a subsequent recorded document.

iv. Any property owners' association responsible for maintenance of stormwater control facilities shall be established in accordance with N.C. Gen. Stat., Chapter 47C and Chapter 47F and the property owners' association declaration (or equivalent) shall conform to all applicable provisions of the City Code.

v. The common expenses of the property owners' association shall include, without limitation, costs and expenses for operation and maintenance of stormwater control facilities, all costs for insurance premiums and any other costs listed in the stormwater operations maintenance manual and budget.

i. Stormwater Control Facilities Maintained by a Commercial Lot Owner

i. If a commercial lot owner is responsible for the maintenance of the stormwater control facilities, said owner is responsible for making all repairs and replacements of the stormwater control facilities in accordance with the construction drawings approved by the City.

ii. Each owner of a parcel served by the stormwater control facility shall be subject to an assessment charge levied by the designated responsible lot owner.

iii. The assessment charge shall include, without limitation, the actual costs for repairing and maintaining the stormwater control facility, all costs for insurance premiums associated with the stormwater control facility, all costs of required inspections of the stormwater control facility and any other costs listed in the stormwater operations maintenance manual and budget.

iv. The calculation of the assessment charge shall be set forth in a subsequent recorded document.

v. Any assessment charge levied against a lot and remaining unpaid for a period of 30 days after the payment due date shall be delinquent and shall constitute a default of this covenant entitling the lot owner responsible for maintenance of the stormwater control facilities to bring an action at law against the defaulting party plus interest charges, together with all costs and expenses of collection incurred, including, without limitation, court costs and reasonable attorney fees actually incurred.

vi. Each parcel owner served by the stormwater control facility shall have the right to maintain, repair and replace the facility if, after 45 days written notice, the commercial lot owner responsible for maintenance, repair and replacement fails to faithfully discharge its responsibility.

vii. The parcel owner performing any maintenance or repair of the facility shall have the same rights as the designated commercial lot owner to assess all other parcels served by the stormwater control facility.

viii. At any time, the commercial lot owner responsible for the maintenance of stormwater control facility may assign its responsibilities and rights to a property owners' association established in accordance with N.C. Gen. Stat., Chapter 47C and Chapter 47F. In such instance, the owners of the parcels served by the stormwater control facility shall be members of the property owners' association.

j. City Right to Maintain and Repair Stormwater Control Facilities and City's Right of Reimbursement

i. If the stormwater control facilities are not performing adequately or as intended or are not properly maintained or replaced, the City, in its sole discretion, may, after written notice sent to the lot owners and any association, enter the development and perform such construction, installation, repair, reconstruction, replacement and maintenance of the stormwater control facilities as is necessary to remedy the situation.

ii. If the City undertakes the activities listed above, the City shall be fully reimbursed for its costs of inspecting, monitoring, designing, constructing, repairing, reconstructing, replacing and/or installing the stormwater control facility or facilities. Such costs shall include the City's costs of administration, overhead, contracting and public advertising.

iii. In addition to any other rights the City has to be reimbursed for its costs, the City may levy an assessment against each lot served by the noncompliant stormwater control facility. No assessment will be levied by the City without prior notice to affected lot owners. Any unpaid assessment levied by the City shall be, as allowed by law, a lien against the delinquent lot.

k. City's Right To Private Assessments

i. In addition to all of the remedies set forth herein, if the City has not been fully repaid for the work the City performed on any stormwater control facility owned, in fee or easement, by either a property owners' association or a commercial lot owner with the power to assess lot owners for maintenance of the stormwater control facility, the property owners' association and the private commercial lot owner shall assign to the City their right to receive common expense assessments, including stormwater assessments.

ii. The association and private commercial lot owner shall designate and appoint the City as attorney in fact for the expressed and limited purpose of assessing and pursuing collection of such unpaid reimbursement owed to the City.

iii. No assignment of assessment rights shall become effective without 60 days prior written notice to the applicable private commercial lot owner, property owners' association and its members.

l. Action for Specific Performance

i. That, recognizing the consequences to the City of noncompliance with the obligations of the maintenance covenant, the City shall have the right to seek, in any court of appropriate jurisdiction, judicial action for specific performance of any of the obligations and remedies established in this maintenance covenant.

ii. The rights of the City within the maintenance covenant shall not limit any other remedies or enforcement options available to the City under the maintenance covenant, the City Code or State law.

m. No Public Adoption

i. A statement that the City's exercise of its rights under this maintenance covenant, its abatement of public nuisance or its repair of unsafe structures shall not constitute adoption of any stormwater control facility by the City.

ii. A statement that the legal authority of the City is not intended to impede or prohibit the property owners' association or lot owners from taking all necessary actions to inspect, maintain, repair, replace and reconstruct stormwater control facilities so that they function safely, perform the function for which they were created and comply with the provisions of this maintenance covenant and the City Code.

n. City's Right of Non-Action

A statement that the maintenance covenant shall not obligate the City to monitor, maintain, repair, reconstruct, install or replace any stormwater control facility or measure and that the City shall not be liable for the condition or operation of stormwater control facilities.

o. Governmental Functions; Superseding Regulations

i. A statement that nothing contained in the maintenance covenant shall be deemed or construed to, in any way, stop, diminish, limit or impair the City from exercising or performing any regulatory, policing, legislative, governmental or other powers or functions.

ii. A statement that the maintenance covenant shall not restrict or prevent the application of later adopted ordinances or other enactments which may supplement or supersede the provisions of the maintenance covenant.

p. Joint and Several Liability

i. A statement that each lot owner served by one or more stormwater control facilities is jointly or severally responsible for repairs, replacement and maintenance of the stormwater control facilities, including payment of any unpaid ad valorem taxes, public assessments for improvements and unsafe building and public nuisance abatement liens charged against the stormwater control facility and/or the lots served by the facility, including all interest charges thereon, together with all cost and expenses of collection incurred, such as, without limitation, court costs and attorney's fees incurred.

ii. The maintenance covenant shall establish a right of contribution in favor of each owner who pays more than the owner's pro rata share of costs and expenses against all other owners whose real property is served by the same stormwater control facility.

iii. A statement that pro rata sharing may be established either by maintenance assessment provisions for stormwater control facilities in subsequently recorded documents or by dividing the acreage of such owner's portion of the real property served by the stormwater control facilities by the total acreage of the portion of the development served by the same stormwater control facility when no maintenance assessment covenants apply to the property.

iv. A statement that failure to maintain the stormwater control facilities in accordance with the terms of the maintenance covenant and the City Code is a violation of the City Code potentially subjecting each parcel owner subject to the maintenance covenant to significant daily civil penalties and other enforcement actions.

q. Permanently Protected Undisturbed Open Space Areas

A statement that within permanently protected undisturbed open space areas there shall be no land-disturbing activity, no tree disturbing activity, no placement of impervious surface, no removal of vegetation, no encroachment or no construction or erection of any structure shall occur except in accordance with a permit first being issued by the City.

r. Severability

The sections, paragraphs, sentences, clauses and phrase of the maintenance covenant are severable and if any phrase, clause, sentence, paragraph or section of the maintenance covenant is declared invalid by a valid judgment, order or decree of any court of competent jurisdiction, such invalidity shall not affect the remaining phrases, clauses, sentences, paragraphs and sections of the maintenance covenant.

s. Completion and Recording of Maintenance Covenant Form

i. The maintenance covenant shall be binding on all current and subsequent owners of property served by the stormwater control facilities. To protect the interests of the City and the public at large, any existing deed of trust, mortgage or lien encumbering the property, other than tax liens for the current tax year or governmental improvement assessments, must be subordinated to the maintenance covenant.

ii. Prior to recording the maintenance covenant, the attorney who prepared the maintenance covenant shall certify in writing to the City that the maintenance covenant was prepared on a City form that contains all the contents required by *Sec. 9.2.2.G.2.* Certifications shall be on forms approved by the City and shall accompany the maintenance covenant forms.

iii. The maintenance covenant shall be recorded with the local county register of deeds office immediately following the recording of any new lot served by the stormwater control facility or prior to the issuance of any building permit for any existing lot except for improvements made pursuant to *Chapter 8. Subdivision & Site Plan Standards* The maintenance covenant must be the first encumbrance recorded subsequent to the recording of the subdivision plat.

iv. A recorded copy of the maintenance covenant shall be given to the Stormwater Utility Division of Public Works within one business day following recordation. No building permit shall be issued for the property subject to the maintenance covenant until a recorded copy of the maintenance covenant is provided to the Office of Development Services.

3. Payment to Stormwater Facility Replacement Fund

a. At the time of either recording a subdivision plat or issuance of a building permit for a lot not established by subdivision, whichever event first occurs, the developer shall pay to the City a stormwater facility replacement fund payment, which payment shall equal 24% of the estimated cost of constructing all stormwater control facilities shown on applicable development plans.

b. The purpose of the stormwater replacement fund is to ensure that adequate funds are available to the City for the maintenance, repair replacement and reconstruction of stormwater control facilities required by this UDO. Funds expended from the stormwater facility replacement fund shall be used only for the repair, maintenance, reconstruction and/or replacement of stormwater control facilities, together with the costs incurred by the City associated with any work and/or redesign of the facilities.

c. No funds from the stormwater facility replacement fund shall be used for administration of this fee program. Monies collected from the stormwater replacement fund may be spent for maintenance, repair, reconstruction and replacement of any stormwater control facility required by this UDO and located within the City limits or its extra-territorial jurisdiction.

d. Payments collected by the City pursuant shall be kept separate from other revenues of the City. Any funds on deposit not immediately necessary for expenditure shall be invested as allowed in N.C. Gen. Stat. §159-30; all income derived shall be deposited in the separate account and may only be used for repair, maintenance, reconstruction and replacement of stormwater control facilities together with the costs incurred by the City associated with any work or redesign of the facilities.

e. Monies expended from the stormwater facility replacement fund, together with interest, may be recouped by the City from lot owners served by stormwater control facilities maintained, repaired, reconstructed and replaced by the City or its contractors. All recouped monies and interest shall be returned to the stormwater facility replacement fund.

f. The payment of stormwater facility replacement fees is not intended as a substitute for security to ensure the construction of the facilities, which security may be required at such point in the development process as specified in City ordinances and policies.

H. Annual Inspections and Inspection Report Required

The responsible party for maintenance of the stormwater control measures or devices must submit an annual inspection report from a qualified registered North Carolina professional engineer, surveyor or landscape architect to the Stormwater Utility Division of the Public Works Department. The inspections report shall contain all of the following:

1. The name and address of the land owner;
2. The recorded book and page number of the lot of each required stormwater control facility and required open space area;
3. A statement that an inspection was made of all required stormwater control facilities and open space areas;
4. The date of the inspection;
5. A statement that all inspected stormwater control facilities and open space areas are performing properly and are in compliance with the approved stormwater control plan, the applicable maintenance manual required by *Sec. 9.2.2.D.2.* and the Raleigh Stormwater Control and Watercourse Buffer Manual. No sampling of pollutant loading is required as part of the inspection;

6. The original signature and seal of the engineer, surveyor or landscape architect; and
7. All inspection reports shall be on forms supplied by the City. An original inspection report shall be given to the Office of Development Services beginning from the date of the as-built was first certified under *Sec. 9.2.2.D.3.* and each year thereafter on the anniversary date of the certification.

Sec. 9.2.3. Watercourse Buffers

A. Natural Resource Buffers

1. General Rules for All Natural Resource Buffers

Natural resource buffers are intended to provide an area where stormwater flows in a diffuse manner so that the stormwater runoff does not become channeled and infiltration of the stormwater and filtering of pollutants can take place. The following rules apply to all required natural resource buffers.

a. Natural resource buffers shall be delineated on recorded final subdivision plats or at the time of development of the property.

b. The City Council may reduce the width of natural resource buffers when it determines that the extent of the natural resource buffer yard will deprive the landowners of reasonable use of their property.

c. The width of the natural resource buffer shall be measured perpendicularly to the flow of the watercourse and horizontally from the edge of the watercourse banks. When no watercourse banks exist, the centerline of the watercourse shall be used.

2. Falls Watershed Protection Overlay District, Swift Creek Watershed Protection Overlay District and Conservation Management District Watercourse Buffers

Natural resource buffers shall be established along primary and secondary watercourses in a -FWPOD, -SWPOD or CM District.

a. Primary Watercourse Natural Resource Buffers

Natural resource buffers along primary watercourses must meet the following standards.

i. The buffer must be a minimum of 60 feet wide along each side of any watercourse draining 25 or more acres.

ii. The buffer must be a minimum of 35 feet wide along each side of any watercourse draining 5 or more acres but less than 25 acres.

iii. The buffer must be a minimum of 35 feet wide along each side of any watercourse which is a stream draining less than 5 acres.

iv. In the event that the property or subdivision contains impervious surface lot coverage in excess of 24% in a secondary reservoir watershed protection area, the buffer shall be no less than 100 feet wide along each side of the watercourse.

b. Secondary Watercourse Natural Resource Buffers

Unless part of a primary watercourse natural resource buffer, the secondary watercourse natural resource buffers consists of one or more of the following:

i. Lands within the flood prone areas that adjoin primary watercourse natural resource buffers; or

ii. Lands with slopes 15% or greater, adjoining a primary watercourse natural resource buffers or a flood prone area.

3. Metro-Park Overlay District Watercourse Buffers

Natural resource buffers shall be established as primary tree conservation areas pursuant to *Sec. 5.2.2.C.2.* and *Article 9.1. Tree Conservation* along primary and secondary watercourses in a -MPOD. Required tree conservation areas shall meet the following standards.

a. The primary tree conservation area must be a minimum of 50 feet wide along each side of any watercourse draining 25 or more acres.

b. The primary tree conservation area must be a minimum of 25 feet wide along each side of any watercourse draining 5 or more acres but less than 25 acres.

4. Urban Water Supply Watershed Protection Overlay District Watercourse Buffers

Natural resource buffers shall be established along primary and secondary watercourses in a -UWPOD. Required natural resource buffers shall meet the following standards.

ORDINANCE NO. 2015 – 483 TC 371
TC-6-15

AN ORDINANCE TO MODIFY THE EXEMPTIONS FROM ACTIVE STORMWATER CONTROL MEASURES IN THE CITY OF RALEIGH UNIFIED DEVELOPMENT ORDINANCE

NOW THEREFORE, BE IT ORDAINED BY THE CITY COUNCIL OF THE CITY OF RALEIGH THAT:

Section 1. Section 9.2.2.A of the Part 10A Raleigh Unified Development Ordinance, Active Stormwater Control Measures, is hereby amended by deleting it in its entirety and replacing it with the following underlined provisions:

A. Exemptions

The following uses are exempt from the active stormwater control requirements of this section:

1. Any detached house used for single-unit living or any attached house used for two-unit living, including accessory uses, placed on any lot which was either recorded prior to May 1, 2001 (the first application of the Stormwater Management Ordinance) or lawfully recorded later as part of a subdivision approved prior to May 1, 2001;

2. Any plot plan and site plan, including their accessory uses, situated on any lot of ½ acre or less in size which was either recorded prior to May 1, 2001 or lawfully recorded later as part of a subdivision approved prior to May 1, 2001;

3. Any detached house used for single-unit living or any attached house used for two-unit living, including their accessory uses, placed within any subdivision of one acre or less in aggregate size approved after May 1, 2001;

4. Any plot plan and site plan, including their accessory uses, placed within any subdivision of ½ acre or less in aggregate size approved after May 1, 2001 which cumulatively contains less than 12,000 square feet of impervious surface, including impervious surfaces of related on-site or off-site facilities;

5. The exemptions contained in subsections 1 through 4 above apply only when the boundaries of the lots existing prior to May 1, 2001, or lawfully recorded later as part of a subdivision approved prior to May 1, 2001 remain unchanged. However, recombinations of lots existing prior to May 1, 2001 or lawfully recorded later as part of a subdivision approved prior to May 1, 2001, are allowed whenever all of the following are met:

    a. At least one of the recombined lots contains a detached house used for single-unit living which shall not be removed;

    b. The lot is to be exclusively used for a detached house used for single-unit living, including accessory uses;

c. The recombination involved is either no more than two lots or an aggregate of less than ½ acre and the recombined lot contains a maximum of 24,000 square feet of impervious surface.

6. Land-disturbing activities, not otherwise exempted, that do not require a land-disturbing permit under Sec. 9.4.6 are exempted provided that, upon application of any impervious surfaces this exemption shall not apply;

7. Substitution of impervious surfaces when all the standards of Sec. 10.3.4. are met; and

8. Substitution of impervious surfaces with approved pervious surfaces.

Section 2. All laws and clauses of laws in conflict herewith are repealed to the extent of such conflict.

Section 3. If this ordinance or application thereof to any person or circumstance is held invalid, such invalidity shall not affect other provisions or applications of the ordinance which can be given separate effect and to this end the provisions of this ordinance are declared to be severable.

Section 4. This text change has been reviewed by the Raleigh City Planning Commission.

Section 5. This ordinance has been adopted following a duly advertised public hearing of the Raleigh City Council.

Section 6. This ordinance has been provided to the North Carolina Capital Commission as required by law.

Section 7. This ordinance shall be enforced as provided in N.C.G.S. 160A-175 or as provided in the Raleigh City Code. All criminal sanctions shall be the maximum allowed by law notwithstanding the fifty dollar limit in N.C.G.S. §14-4(a) or similar limitations.

Section 8. This ordinance is effective 5 days after adoption.

ADOPTED: September 1, 2015
EFFECTIVE: September 6, 2015

Application for Variance

RCP RALEIGH DEPARTMENT OF CITY PLANNING

Department of City Planning | 1 Exchange Plaza, Suite 300 | Raleigh, NC 27601 | 919-996-2626

Submit application to: Development Services Customer Service Center, 1 Exchange Plaza, Suite 400, Raleigh, NC 27601

NATURE OF REQUEST	OFFICE USE ONLY
Nature of variance request (If more space is needed, submit addendum on separate sheet): Property owners request a variance for complete relief from the active stormwater control measures and requirements set forth in UDO Section 9.2.2. to allow for the construction of a detached house and any accessory structures/impervious surfaces on the property.	**Transaction Number** A-105-16
Provide all previous transaction numbers for Coordinated Team Reviews, Due Diligence Sessions, or Pre-Submittal Conferences. If this property was the subject of a previous variance request, provide the case number. None	

GENERAL INFORMATION		
Property Address 1329 Mayfair Rd		**Date** 8/9/16
Property PIN 0794-87-6893	**Current Zoning** R-4	
Nearest Intersection Mayfair Rd and Churchill Rd		**Property size (in acres)** 0.32 acres
Property Owner William & Anna Dickson	**Phone** 252-413-7539	**Fax**
Owner's Mailing Address 1329 Mayfair Rd, Raleigh, NC 27608	**Email** christinacherry5@gmail.com	
Project Contact Person Michael Birch, Morningstar Law Group	**Phone** 919.590.0388	**Fax**
Contact Person's Mailing Address 1330 St. Mary's Street, Suite 450, Raleigh, NC 27605	**Email** mbirch@morningstarlawgroup.com	
Property Owner Signature	**Email**	
Notary Sworn and subscribed before me this 9th day of August, 20 16	**Notary Signature and Seal** LAVETTE S SOTO Notary Public-North Carolina COUNTY OF WAKE My Commission Expires 5-12-2020	

Application for Variance

RCP RALEIGH DEPARTMENT OF CITY PLANNING

Department of City Planning | 1 Exchange Plaza, Suite 300 | Raleigh, NC 27601 | 919-996-2626

Submit application to: Development Services Customer Service Center, 1 Exchange Plaza, Suite 400, Raleigh, NC 27601

NATURE OF REQUEST	OFFICE USE ONLY
Nature of variance request (If more space is needed, submit addendum on separate sheet): Property owners request a variance for complete relief from the active stormwater control measures and requirements set forth in UDO Section 9.2.2. to allow for the construction of a detached house and any accessory structures/impervious surfaces on the property.	**Transaction Number**
Provide all previous transaction numbers for Coordinated Team Reviews, Due Diligence Sessions, or Pre-Submittal Conferences. If this property was the subject of a previous variance request, provide the case number. None	

GENERAL INFORMATION		
Property Address 1329 Mayfair Rd		**Date** 8/9/16
Property PIN 0794-87-6893	**Current Zoning** R-4	
Nearest Intersection Mayfair Rd and Churchill Rd		**Property size (in acres)** 0.32 acres
Property Owner William & Anna Dickson	**Phone** 919-986-9262	**Fax**
Owner's Mailing Address 1329 Mayfair Rd, Raleigh, NC 27608	**Email** wtdickson@hotmail.com	
Project Contact Person Michael Birch, Morningstar Law Group	**Phone** 919.590.0388	**Fax**
Contact Person's Mailing Address 1330 St. Mary's Street, Suite 460, Raleigh, NC 27605	**Email** mbirch@morningstarlawgroup.com	
Property Owner Signature	**Email**	
Notary Sworn and subscribed before me this 9th day of August, 20 16	**Notary Signature and Seal** LAVETTE S SOTO Notary Public-North Carolina COUNTY OF WAKE My Commission Expires 5-12-2020	

LINETYPE LEGEND

BOUNDARY
R/W
℄
CONCRETE
ADJOINER
FENCE —X—X—X—

R-4 SETBACKS

FRONT	30'
SIDE	10'
REAR	30'
CORNER	20'

VICINITY MAP

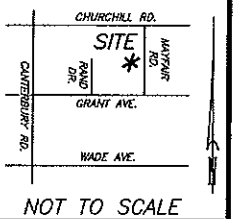

NOT TO SCALE

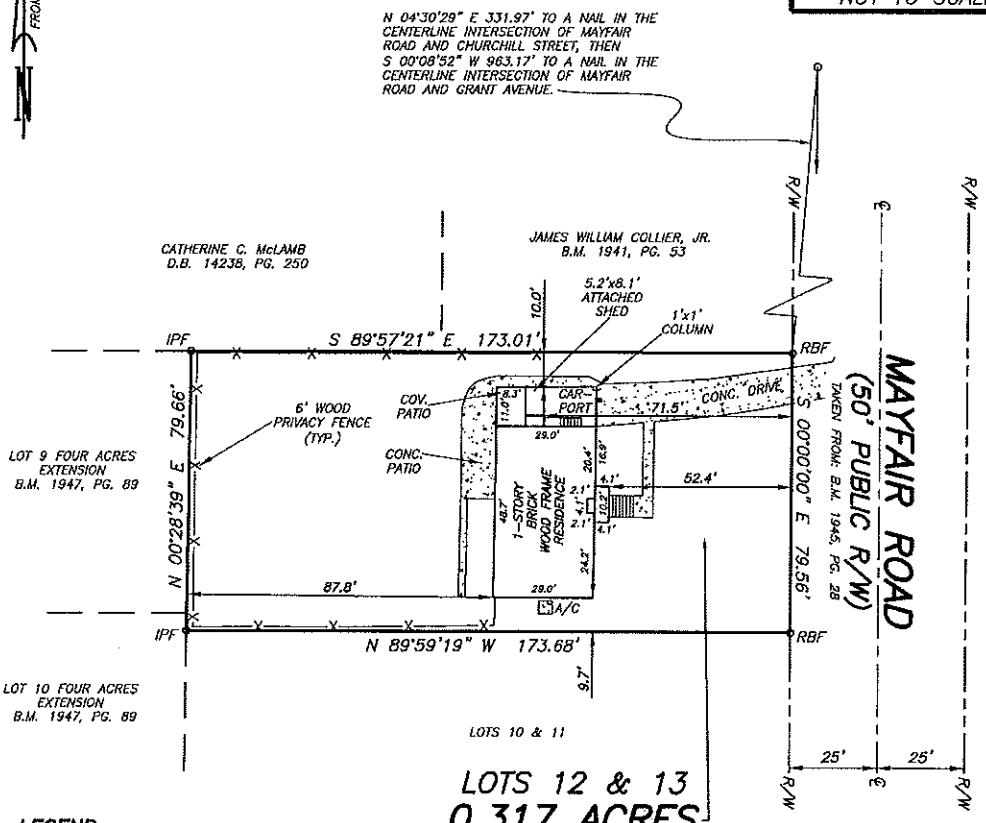

LOTS 12 & 13
0.317 ACRES

LEGEND

(IPF) IRON PIPE FOUND
(RBF) REBAR FOUND
(R/W) RIGHT OF WAY
(℄) CENTERLINE OF RIGHT OF WAY
(A/C) AIR CONDITIONING

NOTE:
1. RAW ERROR OF CLOSURE WAS 10,000+, MISCLOSURE WAS DISTRIBUTED BY THE COMPASS METHOD. THE DISTANCES ON THIS MAP ARE ADJUSTED HORIZONTAL GROUND UNLESS NOTED OTHERWISE. ALL AREAS CALCULATED BY COORDINATE COMPUTATION.
2. THE PROPERTY IS NOT LOCATED IN THE 100 YEAR FLOODPLAIN PER F.I.R.M. MAP NO. 3720079400 J, EFFECTIVE DATE MAY 2, 2006.

LOTS 12 & 13
FOUR ACRES
PART OF SUNSET HILLS
1329 MAYFAIR ROAD
RALEIGH, WAKE COUNTY, NC

PROPERTY OF
WILLIAM THOMAS DICKSON
AND
ANNA CHRISTINA CHERRY DICKSON

40' 20' 0 40' 80'
GRAPHIC SCALE

REFERENCE: BOOK OF MAPS 1945, PAGE 28.

I CERTIFY THAT THIS MAP WAS DRAWN UNDER MY SUPERVISION FROM AN ACTUAL SURVEY MADE UNDER MY SUPERVISION USING THE REFERENCES SHOWN HEREON; THAT THE BOUNDARIES NOT SURVEYED ARE INDICATED AS DRAWN FROM SAID REFERENCES; THAT THE RATIO OF PRECISION OR POSITIONAL ACCURACY IS 1:15,000; AND THAT THIS MAP MEETS THE REQUIREMENTS OF THE STANDARDS OF PRACTICE FOR LAND SURVEYING IN NORTH CAROLINA (21 NCAC 56, 1600).
THIS 1st DAY OF FEBRUARY, 20 16.

Marshall Wight
PROFESSIONAL LAND SURVEYOR L-5034

NORTH CAROLINA PROFESSIONAL SEAL L-5034 LAND SURVEYOR MARSHALL G. WIGHT

WITHERSRAVENEL
ENGINEERS-PLANNERS-SURVEYORS
115 MACKENAN DRIVE
CARY, N.C. 27511
PHONE (919) 469-3340
FAX (919) 467-6008
LICENSE #C-0832

DATE: 01-29-16 | SCALE: 1"= 40'

IMPERVIOUS COVERAGE CALCULATIONS	
HOUSE	2,372 SF
COVERED PORCH	345 SF
AC PADS	18 SF
DRIVE & WALK	1,087 SF
TOTAL	3,822 SF

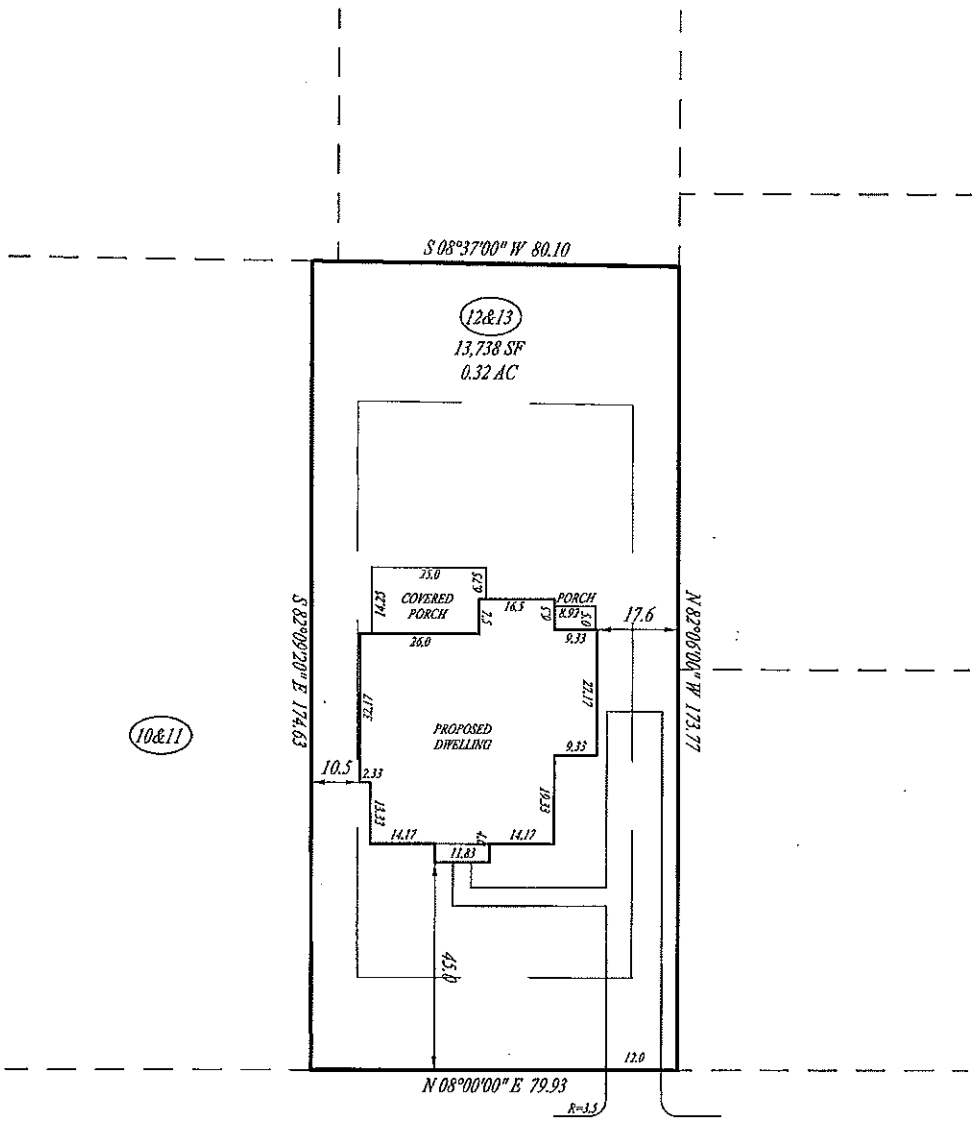

NOTE:
ALL CONSTRUCTION SHALL BE DONE IN ACCORDANCE WITH ALL CITY OF RALEIGH & NCDOT STANDARDS & SPECIFICATIONS

REFERENCES
DEED BOOK 1610 PAGE 651

REVISED 06-27-16 MOVE HOUSE

THIS MAP IS NOT A CERTIFIED SURVEY AND HAS NOT BEEN REVIEWED BY A LOCAL GOVERNMENT AGENCY FOR COMPLIANCE WITH ANY APPLICABLE LAND DEVELOPMENT REGULATIONS

PLOT PLAN
PRELIMINARY PLAT
NOT FOR RECORDATION, CONVEYANCES OR SALES
KELLUM B. BERNARD

NORTH CAROLINA PROFESSIONAL SEAL L3083 LAND SURVEYOR KELLUM B. BERNARD

LANDS OF
LEGACY CUSTOM HOMES
1329 MAYFAIR ROAD
FOUR ACRES SUBDIVISION
WAKE COUNTY RALEIGH NORTH CAROLINA

DATE: 06-24-16
SCALE: 1"=30'
1329MAYFAIR CARLSON DMS

BERNARD & ASSOCIATES
PROFESSIONAL LAND SURVEYORS
324 DIMOCK WAY
WAKE FOREST, NORTH CAROLINA 27587
(919) 414-3601

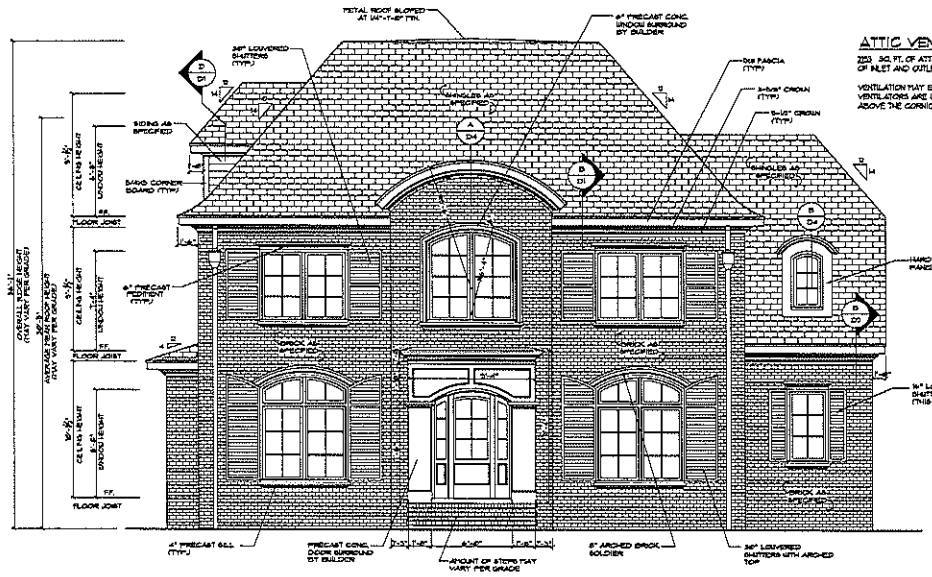

FRONT ELEVATION

SCALE: 1/4"=1'

ATTIC VENTILATION

2253 SQ. FT. OF ATTIC / 300 = 7.51 SQ. FT. OF INLET AND OUTLET.

VENTILATION MAY BE REDUCED 50% WHEN VENTILATORS ARE USED AT LEAST 3'-0" ABOVE THE CORNICE VENTS.

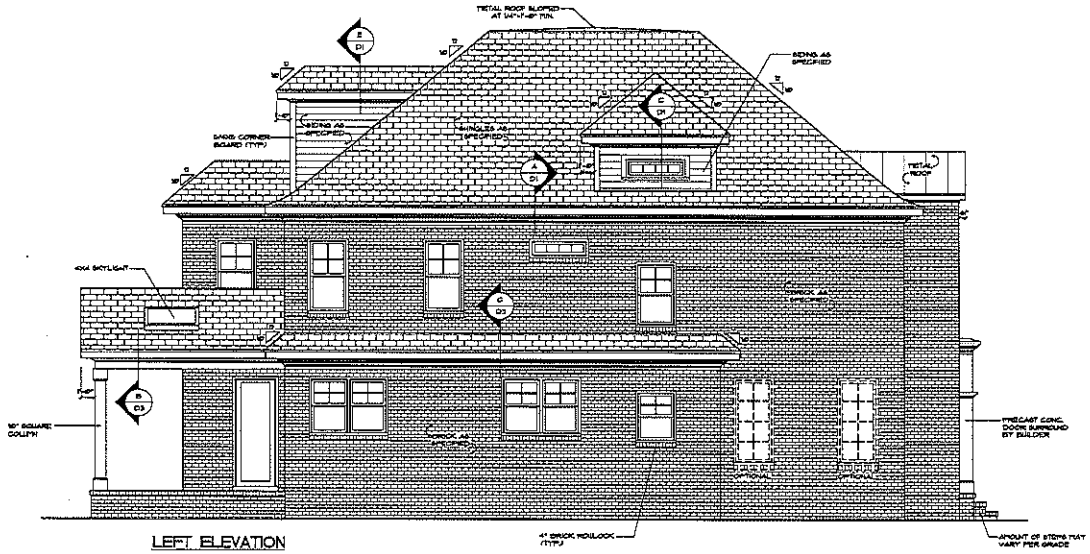

LEFT ELEVATION

SCALE: 1/4"=1'

www.frazierhomedesign.com
FRAZIER HOME DESIGN, LLC.
900 RIDGEFIELD DRIVE, STE. 170
RALEIGH, NC 27609
OFFICE: (919)-424-7245

DICKSON RESIDENCE

DATE:	04/20/2016
DRAWN BY:	CN
REVISION DATE:	05/26/2016

FRONT/LEFT SIDE ELEVATIONS

SHEET NO.

A1

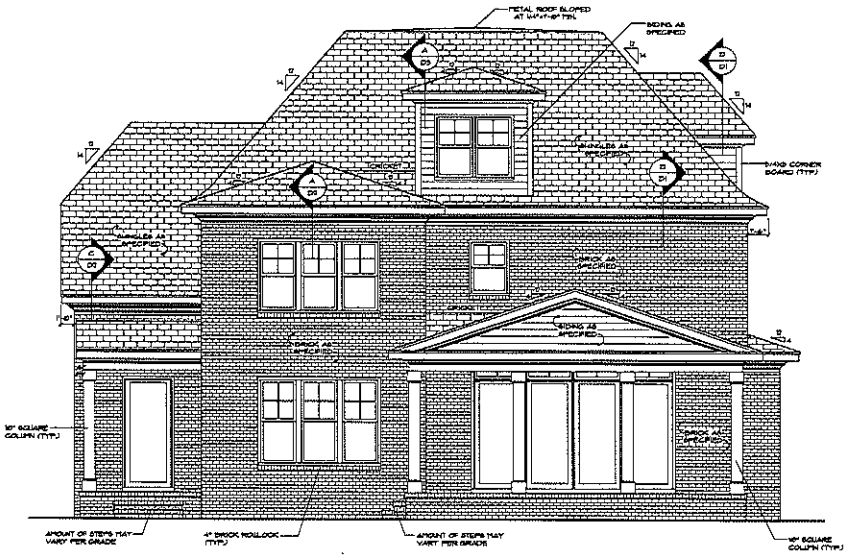

REAR ELEVATION

SCALE: 1/4"=1'

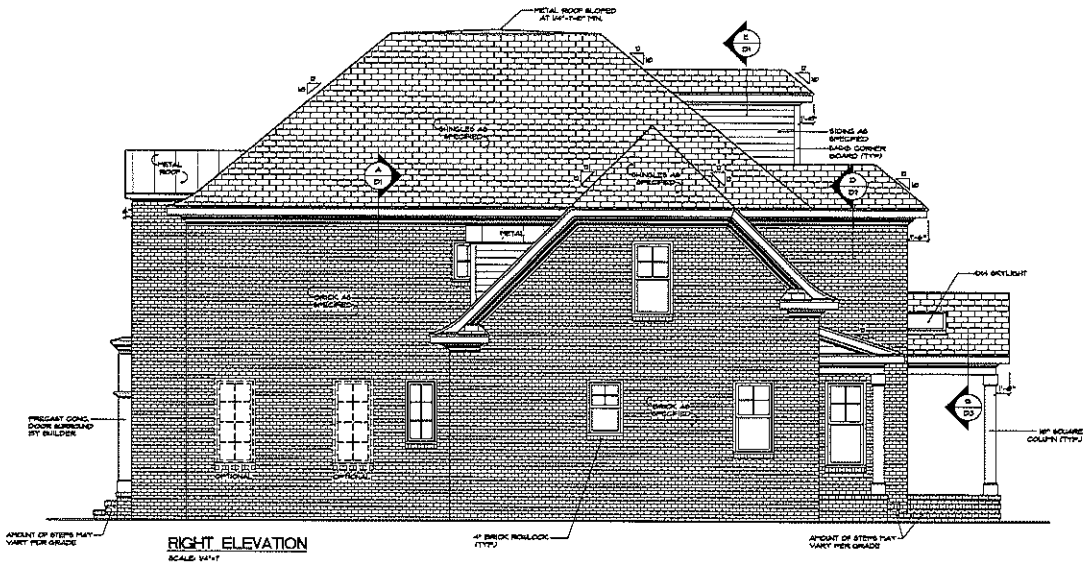

RIGHT ELEVATION

SCALE: 1/4"=1'

www.frazierhomedesign.com
FRAZIER HOME DESIGN, LLC.
900 RIDGEFIELD DRIVE, STE. 170
RALEIGH, NC 27609
OFFICE: (919) 424-7245

DICKSON RESIDENCE

DATE:	04/20/2010
DRAWN BY:	CN
REVISION DATE:	05/20/2010

REAR/RIGHT SIDE ELEVATIONS

SHEET NO.

A2

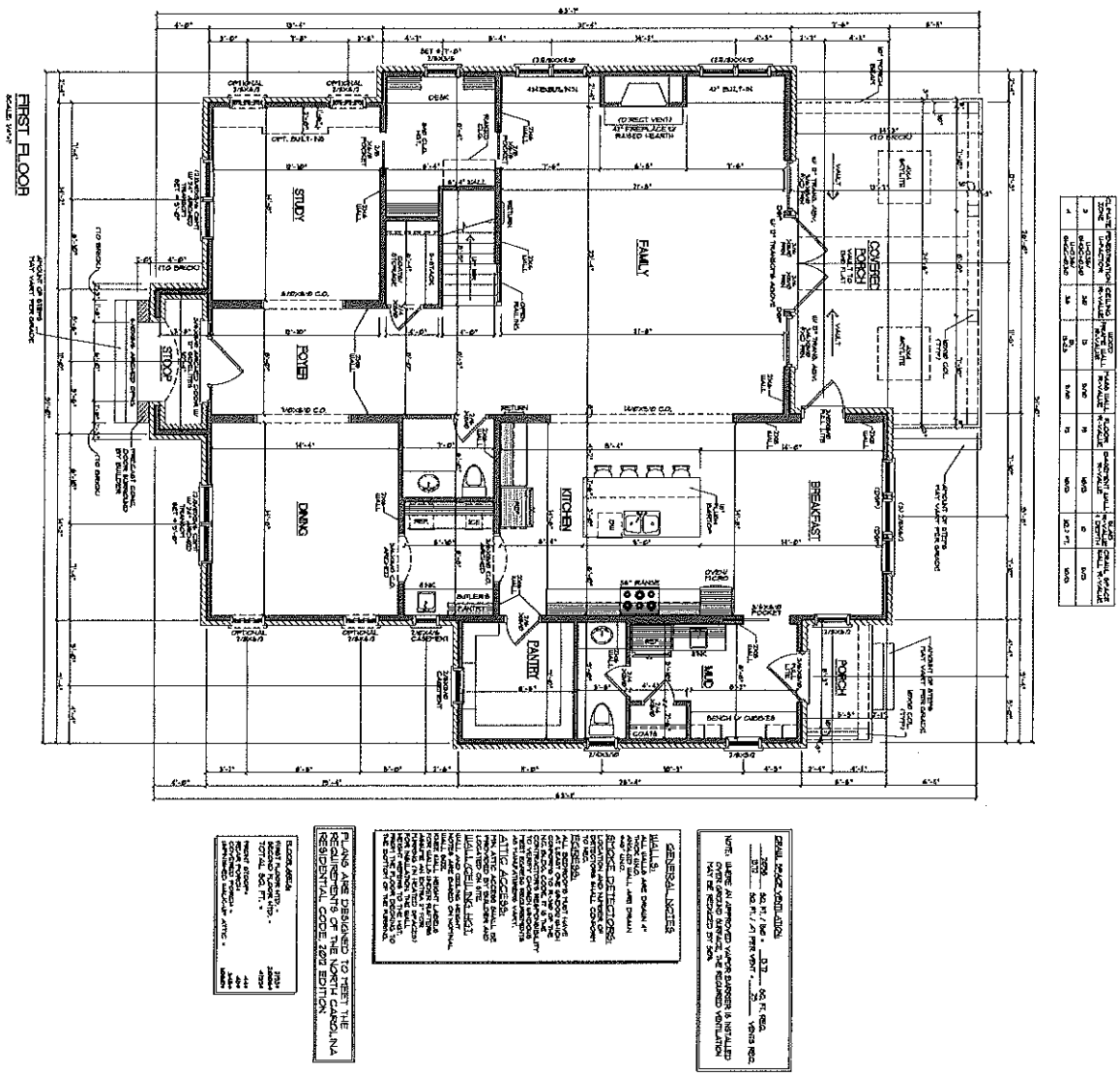

SHEET NO.	A3
FIRST FLOOR	
DATE:	04/20/2016
DRAWN BY:	CN
REVISION DATE:	05/20/2016

DICKSON RESIDENCE

www.frazierhomedesign.com
FRAZIER HOME DESIGN, LLC.
900 RIDGEFIELD DRIVE, STE. 170
RALEIGH, NC 27609
OFFICE: (919)-424-7245

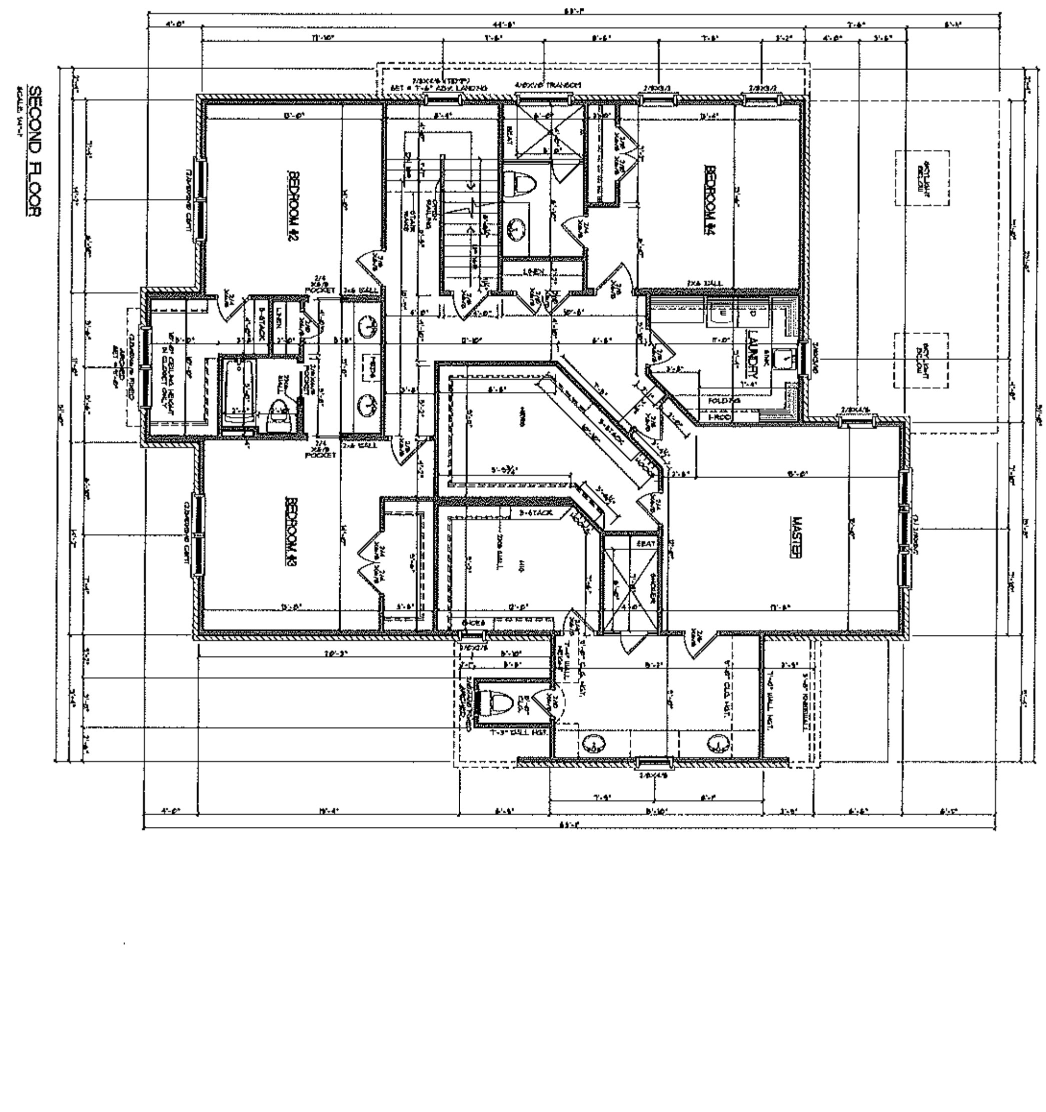

DATE: 04/20/2016
DRAWN BY: CN
REVISION DATE: 05/26/2016

SECOND FLOOR

SHEET NO. A4

DICKSON RESIDENCE

www.frazierhomedesign.com

FRAZIER HOME DESIGN, LLC.

900 RIDGEFIELD DRIVE, STE. 170
RALEIGH, NC 27609
OFFICE: (919)-424-7245

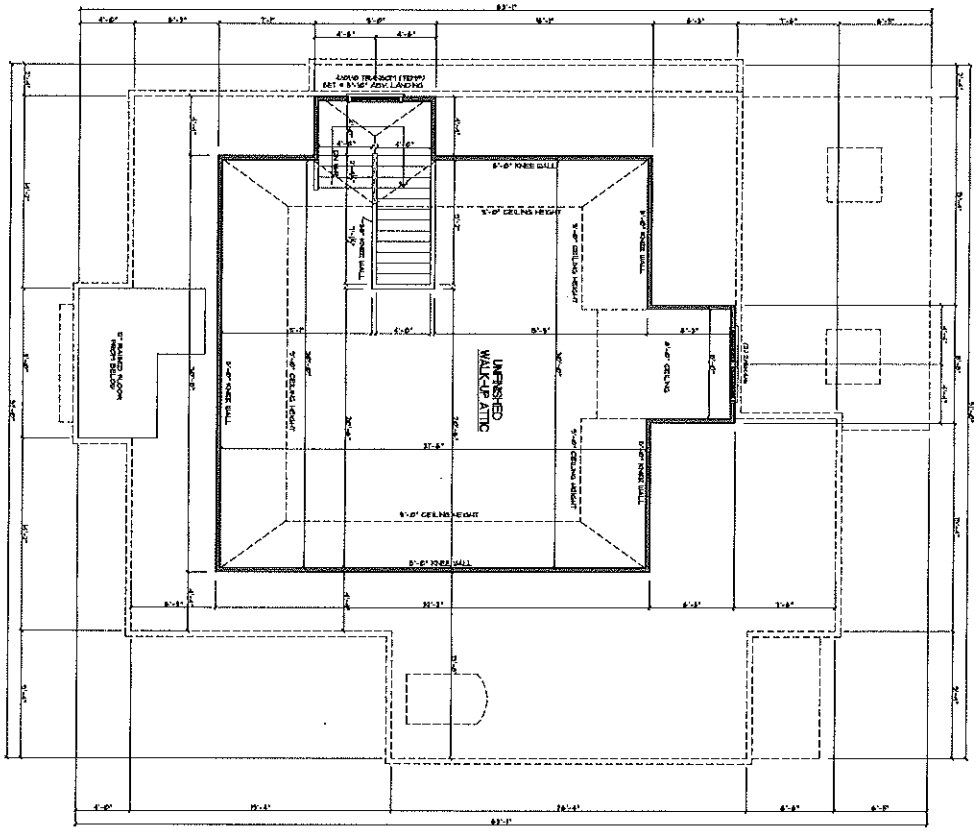

SHEET NO. A5	WALK-UP ATTIC	DATE: 04/02/2016 DRAWN BY: CK REVISION DATE: 09/26/2016

DICKSON RESIDENCE

www.frazierhomedesign.com
FRAZIER HOME DESIGN, LLC.
900 RIDGEFIELD DRIVE, STE. 170
RALEIGH, NC 27609
OFFICE: (919)-424-7245

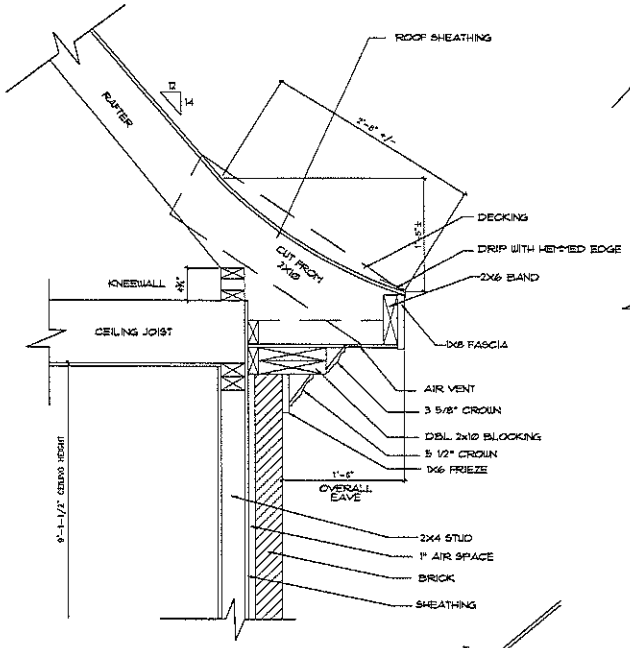

CORNICE DETAIL "A"

SCALE: 1-1/2"=1'

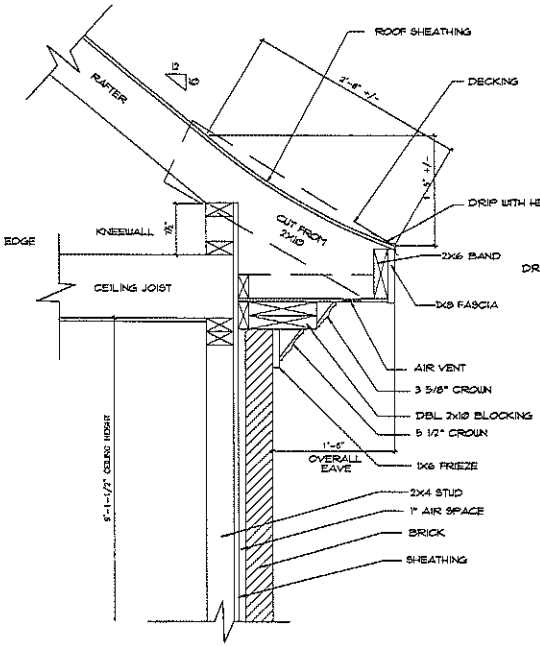

CORNICE DETAIL "B"

SCALE: 1-1/2"=1'

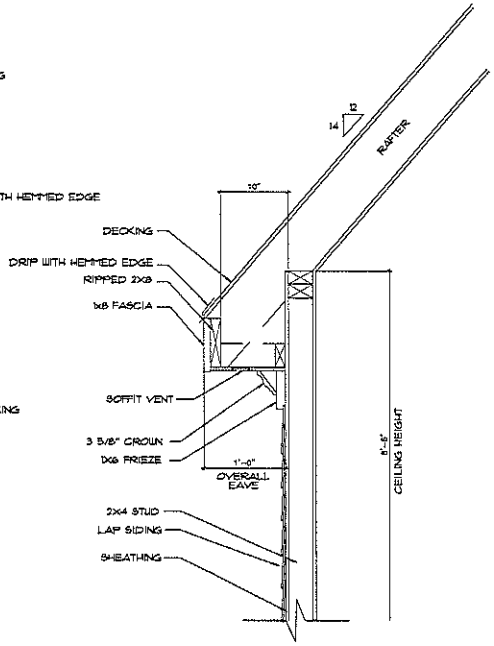

CORNICE DETAIL "C"

SCALE: 1-1/2"=1'

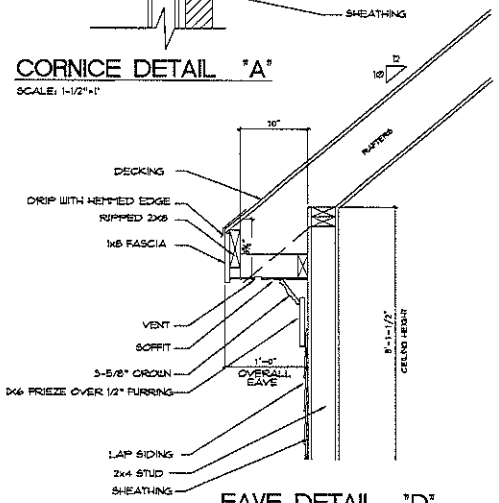

EAVE DETAIL "D"

SCALE: 1-1/2"=1'

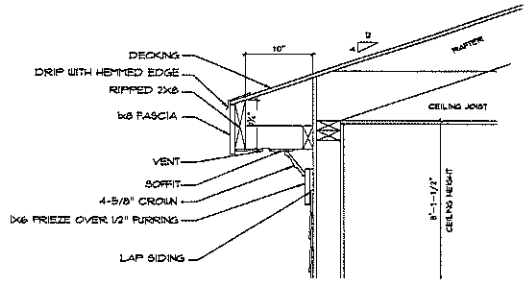

EAVE DETAIL- "E"

SCALE: 1-1/2"=1'

www.frazierhomedesign.com
FRAZIER HOME DESIGN, L.L.C.
900 RIDGEFIELD DRIVE, STE. 170
RALEIGH, NC 27609
OFFICE: (919)-424-7245

DICKSON RESIDENCE

DATE:	04/20/2016
DRAWN BY:	CN
REVISION DATE:	05/26/2016

DETAILS

SHEET NO.

D1

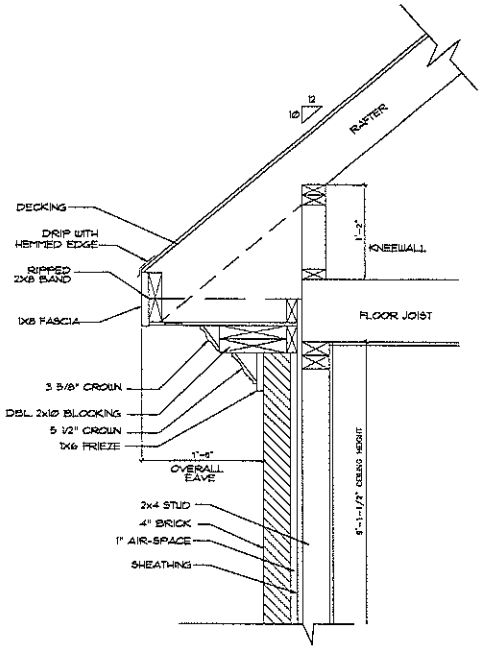

EAVE DETAIL "A"

SCALE: 1-1/2"=1'

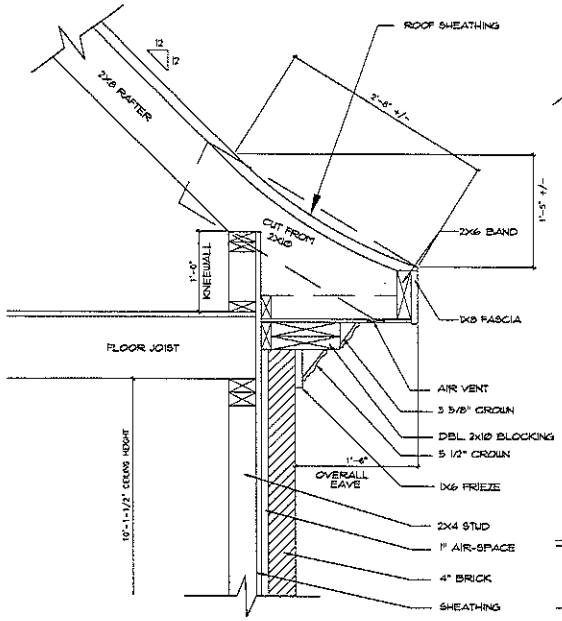

CORNICE DETAIL "B"

SCALE: 1-1/2"=1'

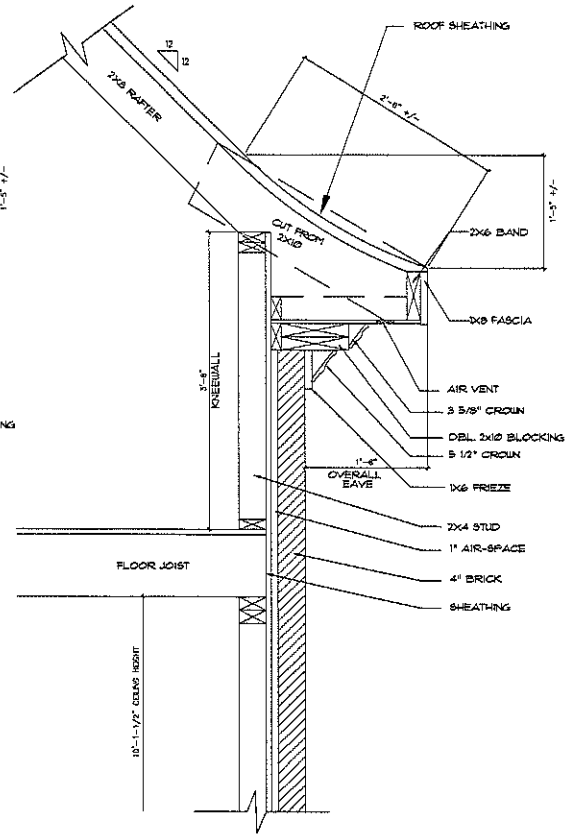

CORNICE DETAIL "C"

SCALE: 1-1/2"=1'

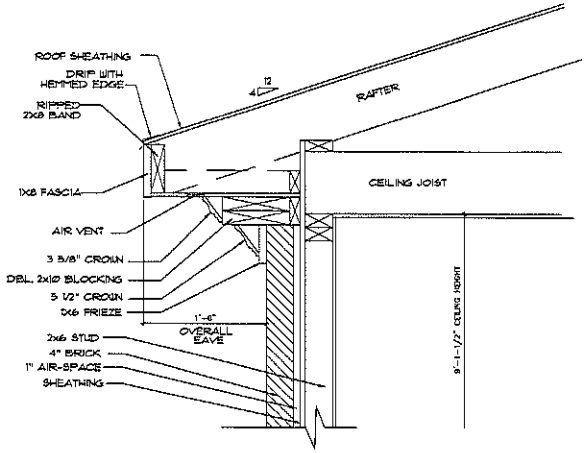

EAVE DETAIL "D"

SCALE: 1-1/2"=1'

www.frazierhomedesign.com
FRAZIER HOME DESIGN, LLC.
900 RIDGEFIELD DRIVE, STE. 170
RALEIGH, NC 27609
OFFICE: (919)-424-7245

DICKSON RESIDENCE

DATE:	04/20/2016
DRAWN BY:	CN
REVISION DATE:	05/20/2016

DETAILS

SHEET NO.
D2

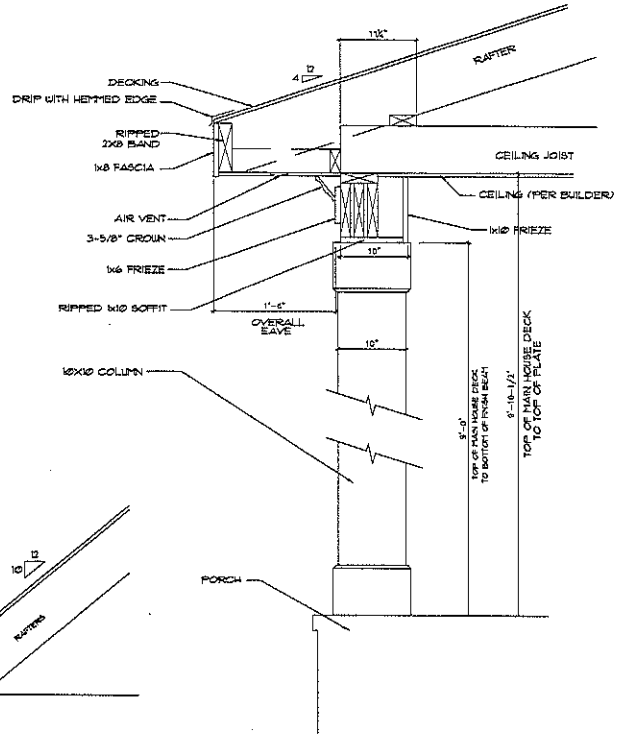

PORCH DETAIL "B"

SCALE: 1-1/2"=1'

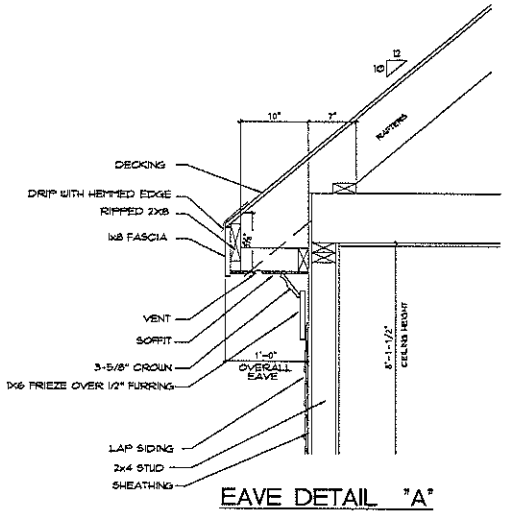

EAVE DETAIL "A"

SCALE: 1-1/2"=1'

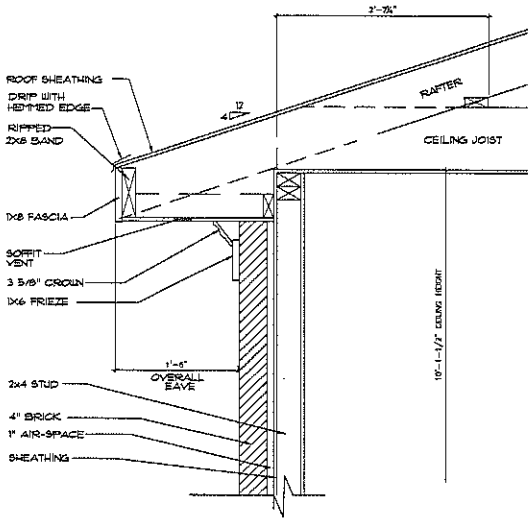

EAVE DETAIL "C"

SCALE: 1-1/2"=1'

www.frazierhomedesign.com
FRAZIER HOME DESIGN, LLC.
900 RIDGEFIELD DRIVE, STE. 170
RALEIGH, NC 27609
OFFICE: (919)-424-7245

DICKSON RESIDENCE

DATE:	04/20/2016
DRAWN BY:	CN
REVISION DATE:	05/26/2016

DETAILS

SHEET NO.

D3

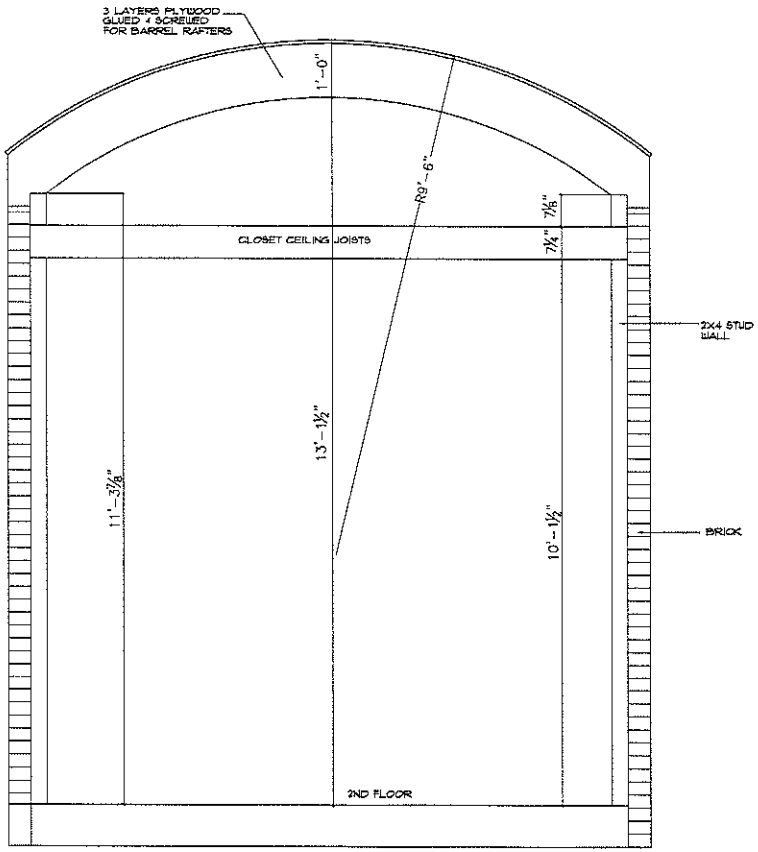

BARREL ROOF DETAIL "A"

SCALE: 1"=1'

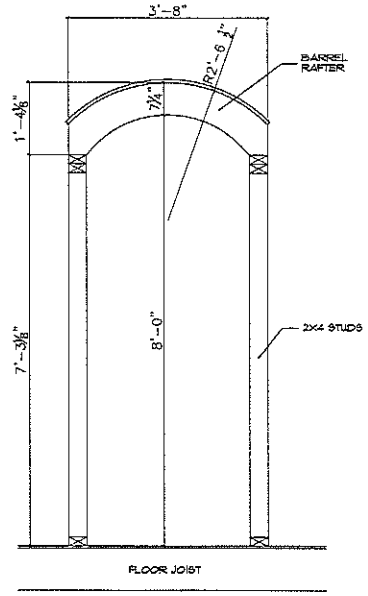

DORMER DETAIL-"A"

SCALE: 1"=1'

www.frazierhomedesign.com
FRAZIER HOME DESIGN, LLC.
900 RIDGEFIELD DRIVE, STE. 170
RALEIGH, NC 27609
OFFICE: (919)-424-7245

DICKSON RESIDENCE

DATE:	04/20/2016
DRAWN BY:	CN
REVISION DATE:	05/26/2016

DETAILS

SHEET NO.
D4

Home

Wake County Real Estate Data
Account Summary

iMaps
Tax Bills

Real Estate ID **0065133** PIN # **0794876893**

WAKE COUNTY NORTH CAROLINA

Location Address
1329 MAYFAIR RD

Property Description
LO12 & 13

Account Search

Pin/Parcel History Search Results New Search

Account | Buildings | Land | Deeds | Notes | Sales | Photos | Tax Bill | Map

Property Owner	Owner's Mailing Address	Property Location Address
DICKSON, WILLIAM & ANNA (Use the Deeds link to view any additional owners)	**1329 MAYFAIR RD** **RALEIGH NC 27608-1939**	**1329 MAYFAIR RD** **RALEIGH NC 27608-1939**

Administrative Data		**Transfer Information**		**Assessed Value**	
Old Map #	**E005-E0017-0030**				
Map/Scale	**0794 08**	Deed Date	**2/9/2016**	Land Value	**$350,000**
VCS	**01RA275**	Book & Page	**16288 1476**	Assessed	
City	**RALEIGH**	Revenue Stamps	**800.00**	Bldg. Value	**$57,697**
Fire District		Pkg Sale Date	**2/9/2016**	Assessed	
Township	**RALEIGH**	Pkg Sale Price	**$400,000**		
Land Class	**R-<10-HS**	Land Sale Date			
ETJ	**RA**	Land Sale Price		Tax Relief	
Spec Dist(s)					
Zoning	**R-4**	**Improvement Summary**		Land Use Value	
History ID 1				Use Value	
History ID 2		Total Units	**1**	Deferment	
Acreage	**.32**	Recycle Units	**1**	Historic Deferment	
Permit Date	**2/29/2016**	Apt/SC Sqft		Total Deferred Value	
Permit #	**0000129120**	Heated Area	**1,471**		
				Use/Hist/Tax Relief Assessed	
				Total Value Assessed*	**$407,697**

*Wake County assessed building and land values reflect the market value as of January 1, 2016, which is the date of the last county-wide revaluation. Any inflation, deflation or other economic changes occurring after this date does not affect the assessed value of the property and cannot be lawfully considered when reviewing the value for adjustment.

The January 1, 2016 values will remain in effect until the next county-wide revaluation. Until that time, any real estate accounts created or new construction built is assessed according to the 2016 Schedule of Values.

For questions regarding the information displayed on this site, please contact the Revenue Department at RevHelp@wakegov.com or call 919-856-5400.

Real Estate ID **0065133** PIN # **0794876893**

Location Address
1329 MAYFAIR RD

Property Description
LO12 & 13

Account Search

Pin/Parcel History Search Results New Search

Account | Buildings | Land | Deeds | Notes | Sales | Photos | Tax Bill | Map

Building Location Address	Building Description	Card **01** Of **01**
1329 MAYFAIR RD	**01RA275**	

Bldg Type	**01 Single Family**	Year Blt **1957**	Eff Year **1970**	Base Bldg Value	**$138,761**
Units	**1**	Addns	Remod	Grade	**C+10 110%**
Heated Area	**1,471**			Cond %	**C 63%**
Story Height	**1 Story**	Int. Adjust.		Market Adj.	**F 120%**
Style	**Conventional**			Market Adj.	**B 50%**
Basement	**Crawl Space**	Other Features	**One Fireplace**	Accrued %	**38%**
Exterior	**Brick**			Incomplete Code	
Const Type				**Card 01 Value**	**$57,697**
Heating	**Central**			All Other Cards	
Air Cond	**Central**			Land Value Assessed	**$350,000**
Plumbing	**2 BATH**			Total Value Assessed	**$407,697**

Main and Addition Summary

	Story	Type	Code	Area	Inc
M	**1**	**BR/CS**		**1471**	
A		**OP**	**R**	**32**	
B		**STG**	**X**	**40**	
C		**CP**	**W**	**212**	
D		**OP**	**R**	**24**	
E		**STP**	**=**	**44**	
F		**PATIO**	**$**	**340**	
G					
H					

Other Improvements

Units	DesItem	Code	Year	% ADJ	Inc	Value

Building Sketch

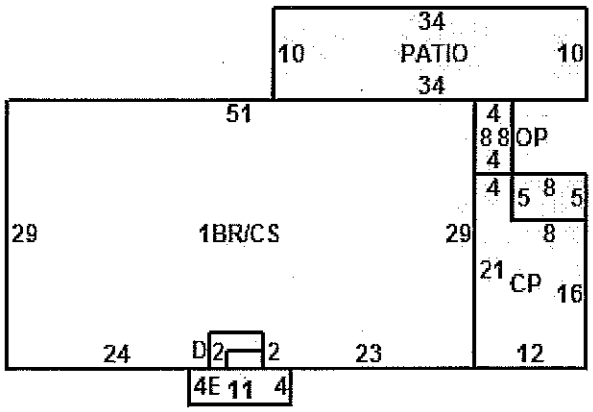

Photograph
5/11/2013

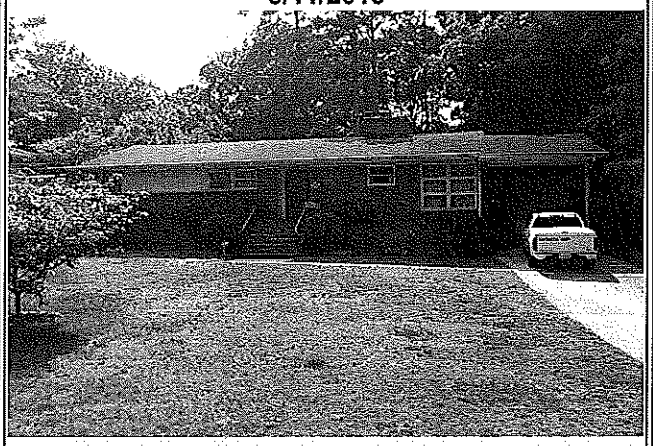

0065133 05/11/2013