System No. F-C-1009

F Rating - 1 and 2 Hr (See Item 1)
T Rating - 1 Hr and 2 Hr (See Item 1)
L Rating At Ambient - Less Than 1 CFM/sq ft
L Rating At 400 F - 4 CFM/sq ft

FC1009

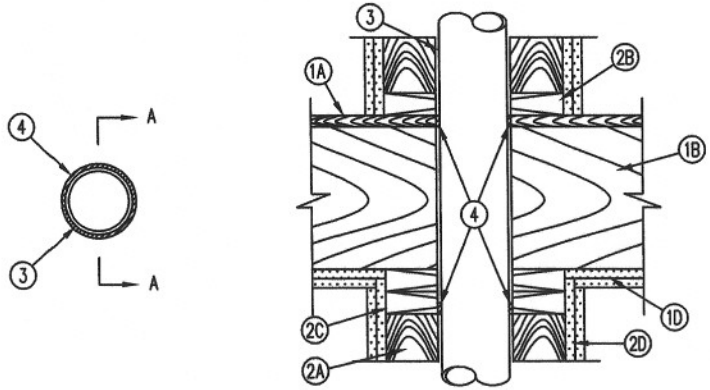

SECTION A–A

1. Floor-Ceiling Assembly - The 1 or 2 hr fire-rated solid or trussed lumber joist floor-ceiling assembly shall be constructed of the materials and in the manner specified in the individual L500 Series Floor-Ceiling Designs in the UL Fire Resistance Directory. The F Rating of the firestop system is equal to the rating of the floor-ceiling and wall assemblies. The general construction features of the floor-ceiling assembly are summarized below:
   A. Flooring System - Lumber or plywood subfloor with finish floor of lumber, plywood or Floor Topping Mixture* as specified in the individual Floor-Ceiling Design. Diam of opening to be max 1 in. larger than diam of pipe. As an alternate, the opening may be square-cut with a max dimension 1 in. greater than the diam of the pipe.
   B. Wood Joists* - Nom 10 in. deep (or deeper) lumber, steel or combination lumber and steel joists, trusses or Structural Wood Members* with bridging as required and with ends firestopped.
   C. Furring Channels - (Not Shown) -(As required) Resilient galvanized steel furring installed in accordance with the manner specified in the individual L500 Series Designs in the Fire Resistance Directory.
   D. Gypsum Board* - Thickness, type, number of layers and fasteners shall be as specified in the individual Floor-Ceiling Design. Diam of opening to be max 1 in. larger than diam of pipe.
   B. Sole Plate - Nom 2 by 4 in., 2 by 6 in. or parallel 2 by 4 in. lumber plates, tightly butted. Diam of opening is to be max 1 in. larger than diam of pipe. As an alternate, the opening may be square-cut with a max dimension 1 in. greater than the diam of the pipe. Plates may be discontinuous over opening, terminating at two opposing edges of opening. Max length of discontinuity to be 1 in. greater than diam of through penetrant.
   C. Top Plate - The double top plate shall consist of two nom 2 by 4 in., 2 by 6 in. or two sets of parallel 2 by 4 in. lumber plates, tightly butted. Diam of opening is to be max 1 in. larger than diam of pipe. As an alternate, the opening may be square-cut with a max dimension 1 in. greater than the diam of the pipe. Plates may be discontinuous over opening, terminating at two opposing edges of opening. Max length of discontinuity to be 1 in. greater than diam of through penetrant.

HILTI® FIRESTOP SYSTEMS

Reproduced by HILTI, Inc. Courtesy of Underwriters Laboratories, Inc. December 10, 2004

CLASSIFIED UL C US

System No. F-C-1009

F Rating - 1 and 2 Hr (See Item 1)
T Rating - 1 Hr and 2 Hr (See Item 1)
L Rating At Ambient - Less Than 1 CFM/sq ft
L Rating At 400 F - 4 CFM/sq ft

FC1009

   D. Steel Plate - When lumber plates are discontinuous, nom 1-1/2 in. wide No. 20 gauge (or heavier) galv steel plates shall be installed to connect each discontinuous lumber plate and to provide a form for the fill material. Steel plates sized to lap 2 in. onto each discontinuous lumber plate and secured to lumber plates with steel screws or nails.
   E. Gypsum Board* - Thickness, type, number of layers and fasteners shall be as specified in individual Wall and Partition Design.
2. Chase Wall - The through penetrant (Item 3) shall be routed through a 1 or 2 hr fire-rated single, double or staggered wood stud/gypsum board chase wall having a fire rating consistent with that of the floor-ceiling assembly. Depth of chase wall to be min 1 in. greater than the diameter of the through penetrant. The chase wall shall be constructed of the materials and in the manner specified in the individual U300 Series Wall and Partition Designs in the UL Fire Resistance Directory and shall include the following construction features:
   A. Studs - Nom 2 by 4 in., 2 by 6 in. or double nom 2 by 4 in. lumber studs. Nom 2 by 4 in. studs are allowed for through-penetrants (Item 3) not exceeding nom 2 in. diam.
3. Through Penetrants - One metallic pipe, conduit or tubing to be installed within the firestop system. Pipe, conduit or tubing to be rigidly supported on both sides of floor assembly. The annular space within the firestop system shall be min 0 in. (point contact) to max 1 in.. The following types and sizes of metallic pipes or conduits may be used:
   A. Steel Pipe - Nom 4 in. diam (or smaller) Schedule 10 (or heavier) steel pipe.
   B. Iron Pipe - Nom 4 in. diam (or smaller) cast or ductile iron pipe.
   C. Conduit - Nom 4 in. diam (or smaller) steel electrical metallic tubing or steel conduit.
   D. Copper Tubing - Nom 4 in. diam (or smaller) Type L (or heavier) copper tubing.
   E. Copper Pipe - Nom 4 in. diam (or smaller) Regular (or heavier) copper pipe.
4. Fill, Void or Cavity Material* - Sealant - Min 3/4 in. thickness of fill material applied within the annulus, flush with the top surface of the floor or the sole plate. A generous bead of fill material also applied within the annulus of the top plate, flush with bottom surface of lower top plate. HILTI CONSTRUCTION CHEMICALS, DIV OF HILTI INC - CP601S, CP606 or FS-One Sealant. (Note: L Ratings apply only when FS-ONE Sealant is used.)

*Bearing the UL Classification Mark

Note: CPVC Pipe Compatibility

HILTI® FIRESTOP SYSTEMS

Reproduced by HILTI, Inc. Courtesy of Underwriters Laboratories, Inc. December 10, 2004

CLASSIFIED UL C US

CITY OF RALEIGH FIRE DEPARTMENT
FIRE PROTECTION DIVISION
310 WEST MARTIN ST. RALEIGH, NC 27602

DESCRIPTION:	REVISIONS:	DATE:	DRAWING NO.
FIRE STOP DETAIL	5–1–06 W Warren UL		FP–11