TYPICAL MH FOR STORM SEWER

PIPE SIZE	MH DIAMETER
12-24"	4'-0"
30-42"	5'-0"
48"	6'-0"
54"	8'-0"

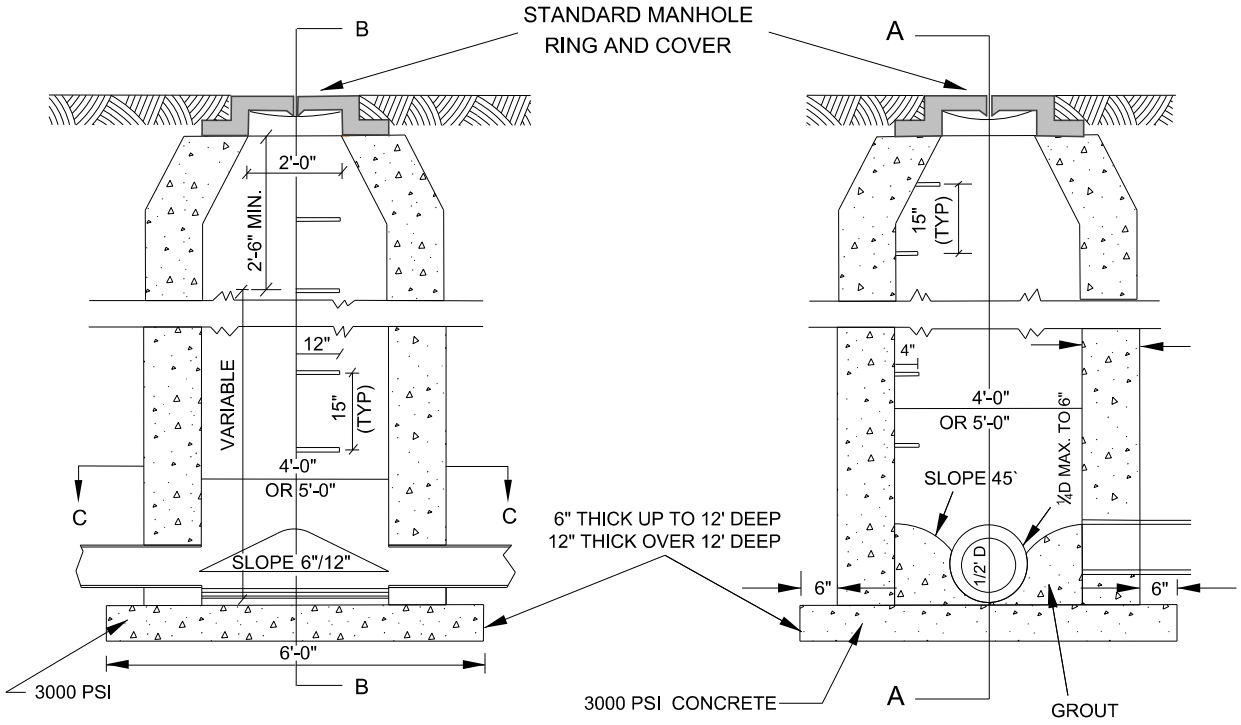

SECTION A-A

SECTION B-B

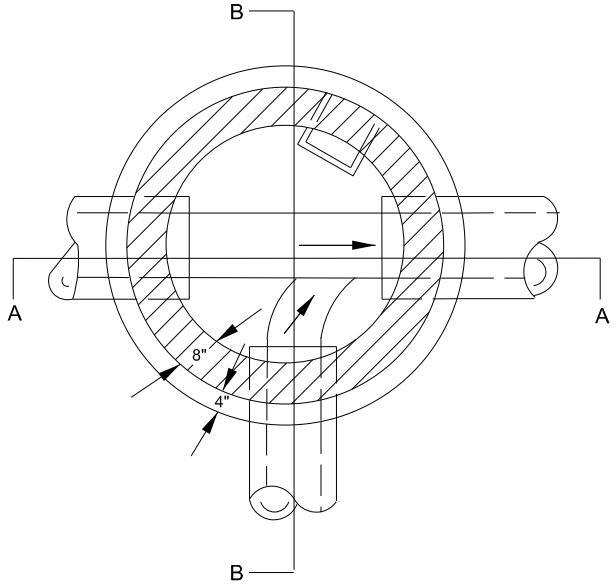

TYPE A

SECTION C-C

NOTES:

1. DEPTH MEASURED FROM TOP OF CASTING TO INVERT OF MANHOLE.
2. PRECAST MANHOLE COMPONENTS SHALL MEET ASTM-C-478 REQUIREMENTS.
3. SEE STANDARD. SW-10.10 FOR MANHOLE COVER DETAIL.
4. DOMESTIC CASTINGS REQUIRED WITHIN STREET RIGHT-OF-WAY.

CITY OF RALEIGH

PUBLIC WORKS DEPARTMENT

REVISIONS	*DATE: 9/1/13*	*NOT TO SCALE*
	STANDARD CLASS "A" MANHOLE	
	SW-10.05	