TYPE N-1, N-1A & R-1

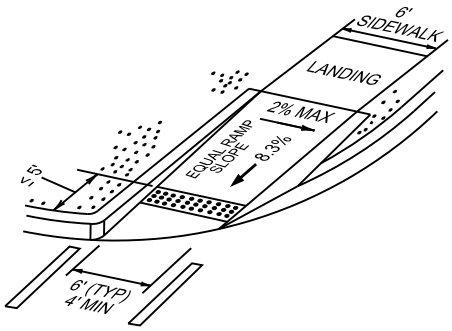

CROSS SLOPE NOT TO EXCEED 2% ON ANY PORTION OF RAMP OR TRANSITION TO STREET.

TYPE N-2 & N-3

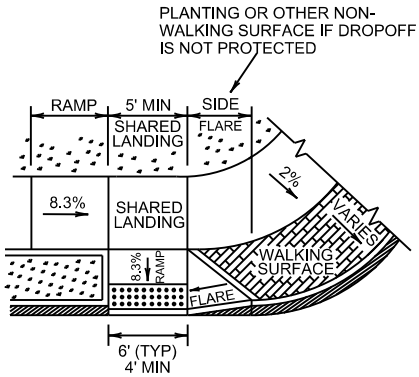

TYPE N-3A

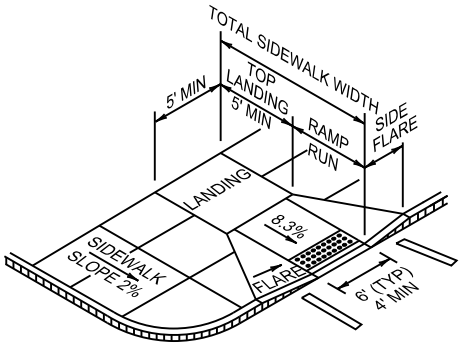

TYPE R-1A

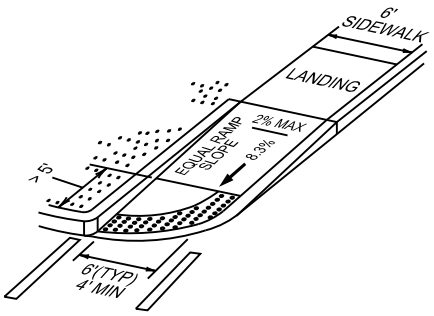

CROSS SLOPE NOT TO EXCEED 2% ON ANY PORTION OF RAMP OR TRANSITION TO STREET.

TYPE R-2

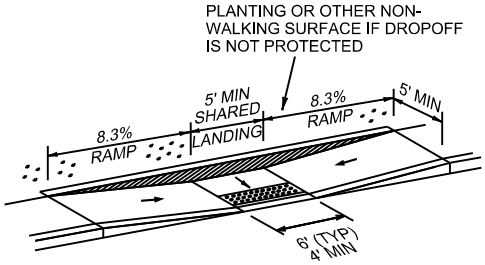

PARALLEL CURB RAMP

TYPE R-3

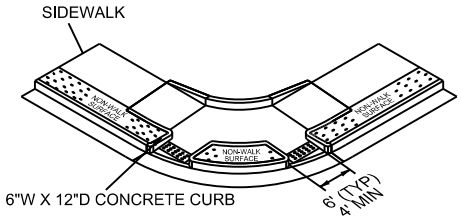

TYPE R-4

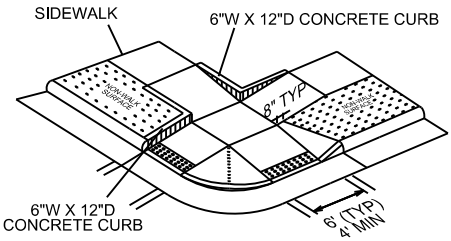

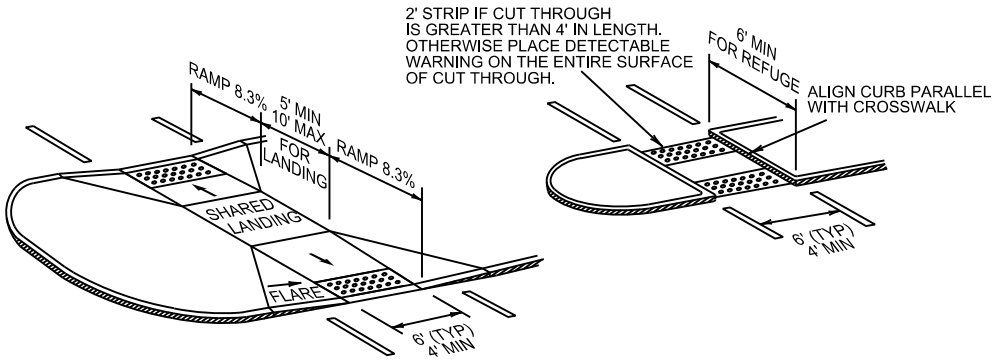

CURB RAMPS AT MEDIAN ISLANDS

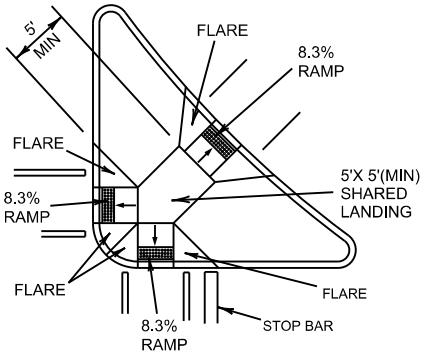

DETECTABLE WARNING SURFACE SHALL EXTEND FULL WIDTH OF SIDEWALK OR RAMP

SHEET 1 OF 4

CITY OF RALEIGH
PUBLIC WORKS DEPARTMENT

REVISIONS	DATE: 9/1/13	NOT TO SCALE
1-13-2014	DETECTABLE WARNING SURFACE PLACEMENT	
		T-20.04.1